eduard

EDUARD DECALS

Made in Czech Republic

SCALE
1/48

Bf 109E stencils

ITEM #
D48013

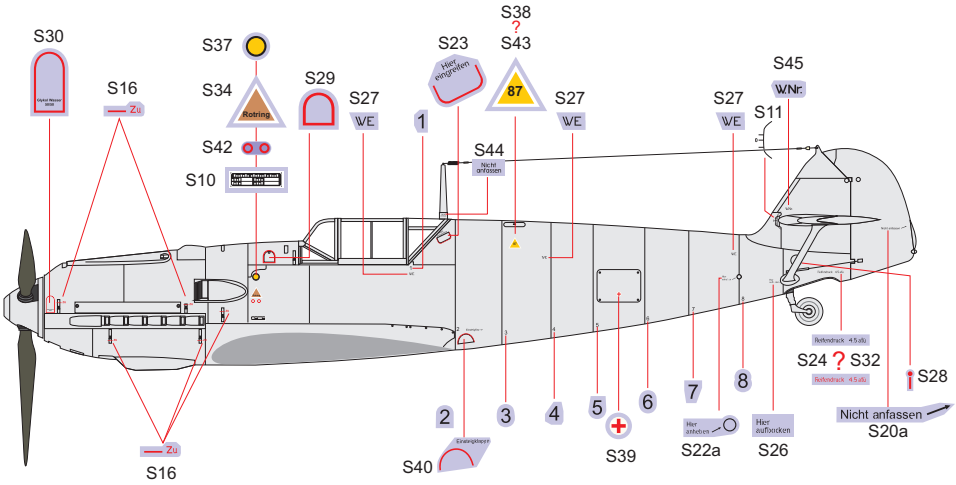

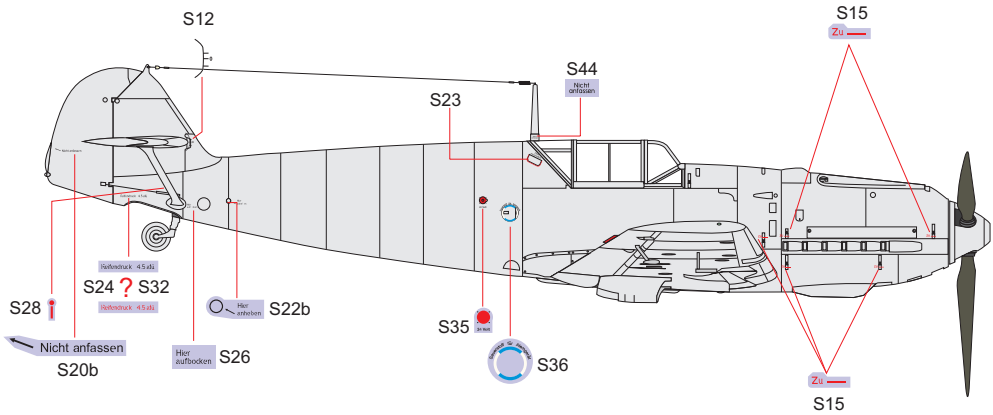

DESIGNED EXCLUSIVELY FOR Bf 109E BY EDUARD

Eduard - Model Accessories, 435 21 Obrnice 170, Czech Republic

WWW.EDUARD.COM

D48013 Bf 109E stencils 1/48

8 591437 180134

1/48 Bf 109E stencils

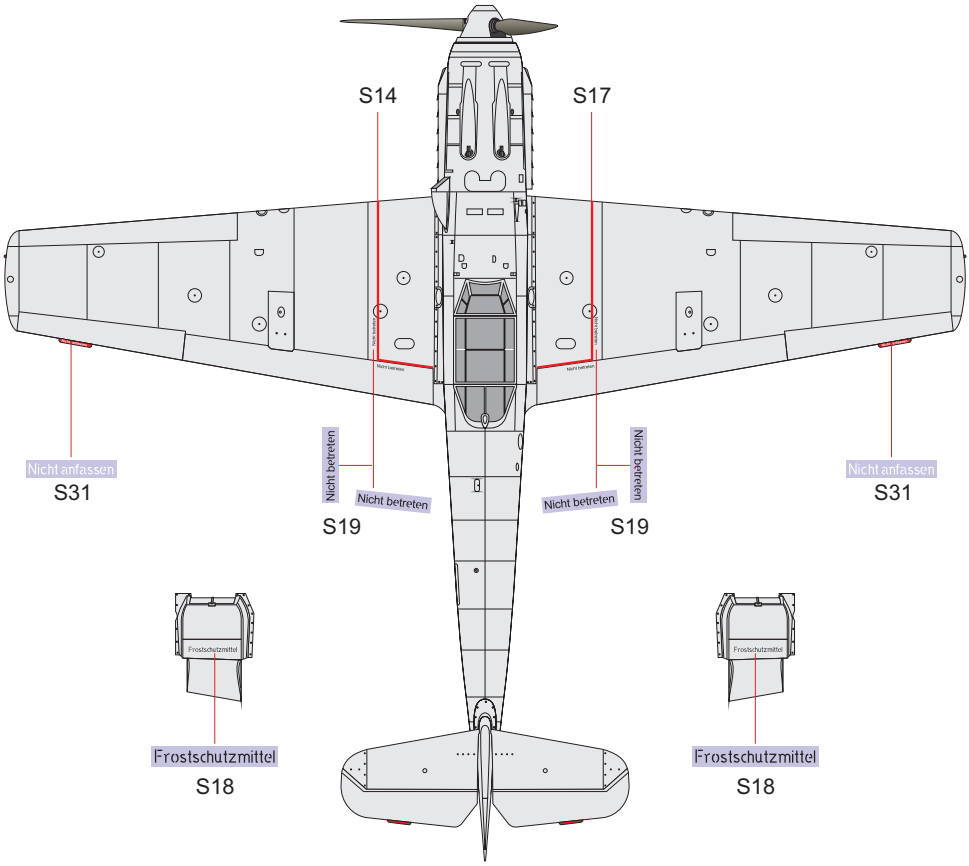

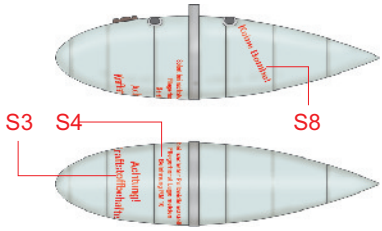

eduard