PETLYAKOV Pe-2

1/72 scale detail set for ITALERI kit

72 206

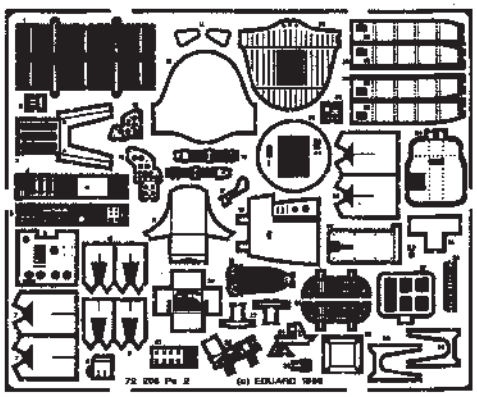

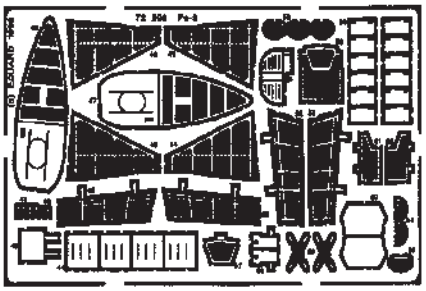

OPPOSITE SIDE

REMOVE

BEND

REPLACE

GRIND

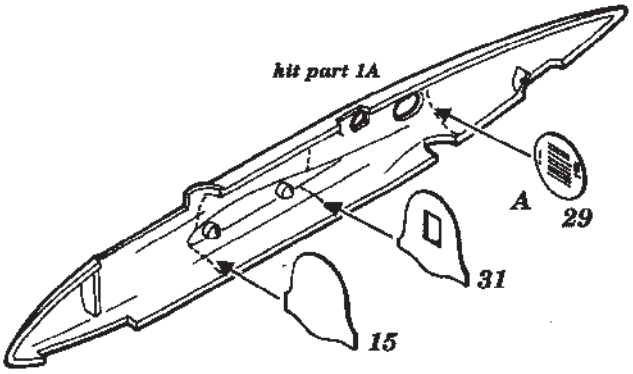

FRONT MG

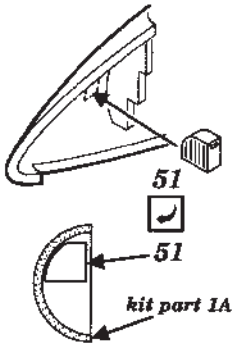

GUNNER 'S SEAT

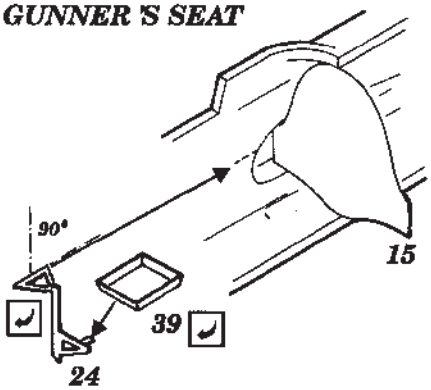

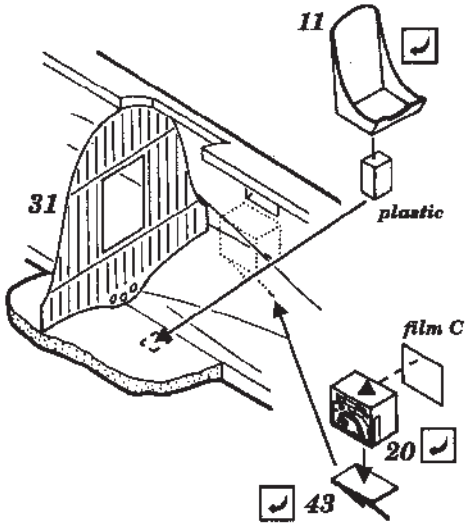

A

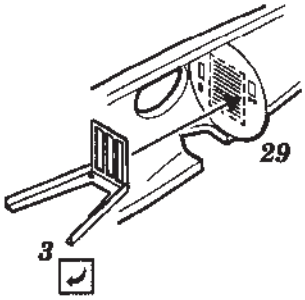

PILOT 'S SEAT

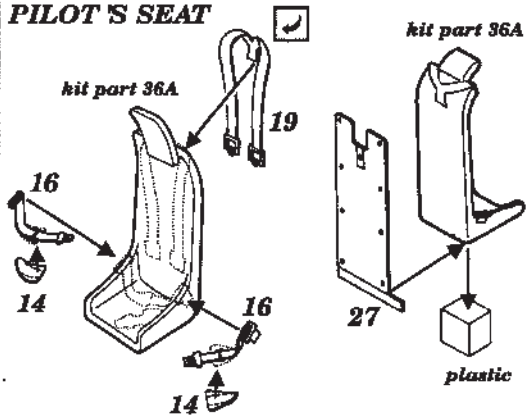

COCKPIT LEFT SIDE

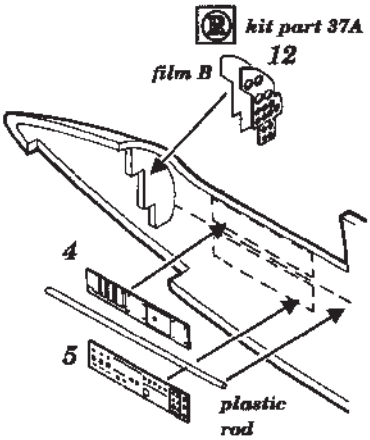

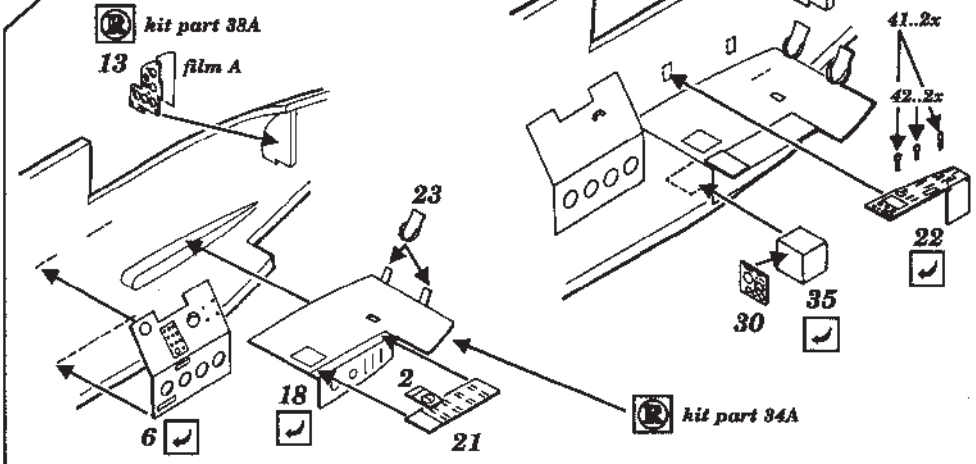

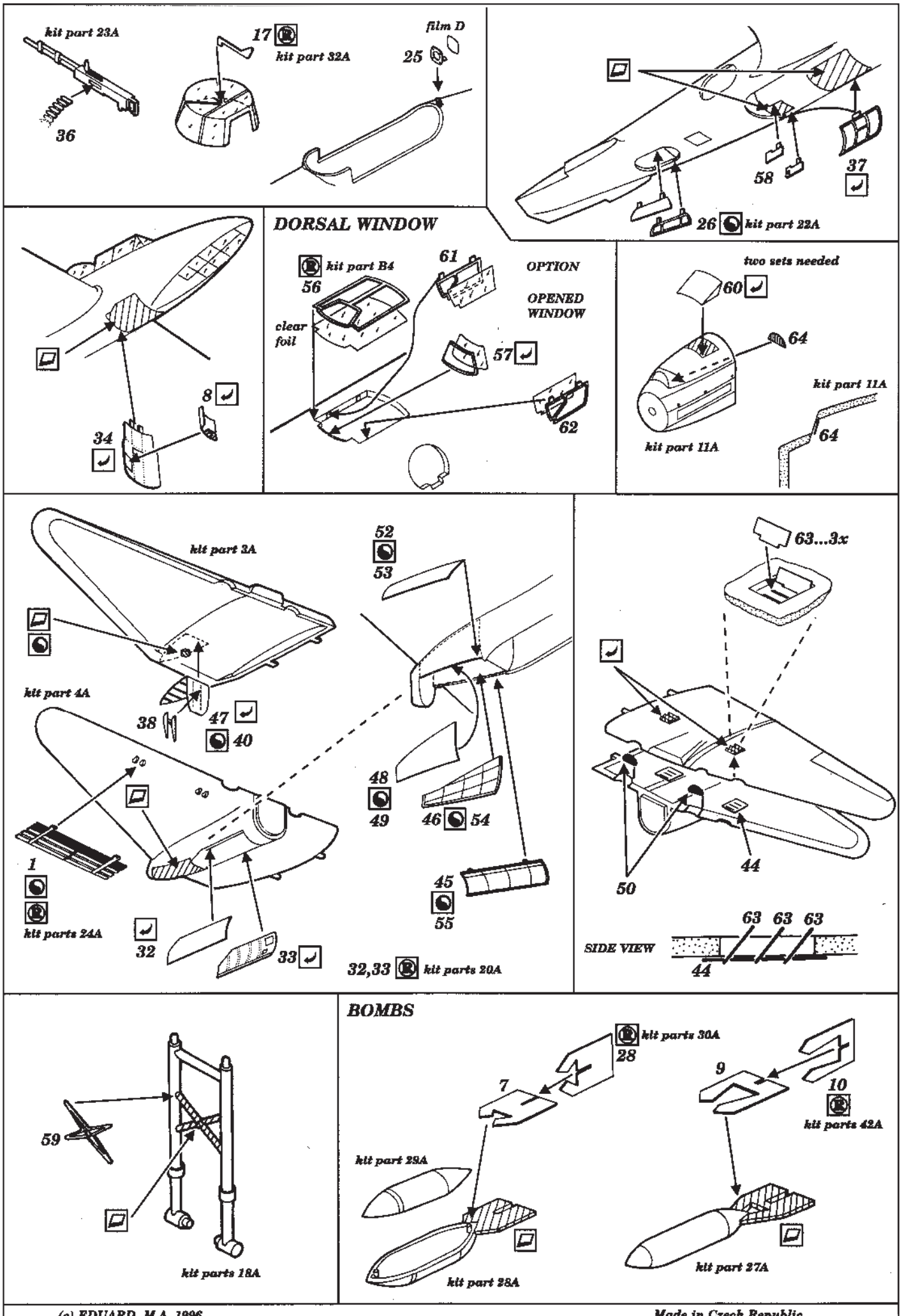

(c) EDUARD M.A. 1996

Made in Czech Republic