KAWASAKI Ki-100-I OTSU

48 170

1/48 scale detail set for HASEGAWA kit

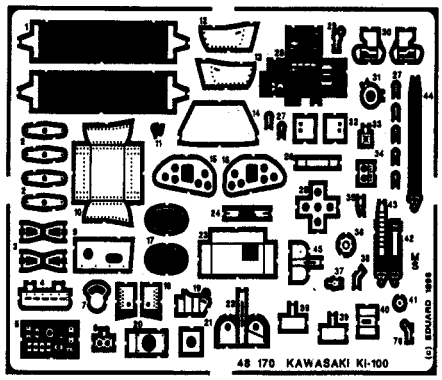

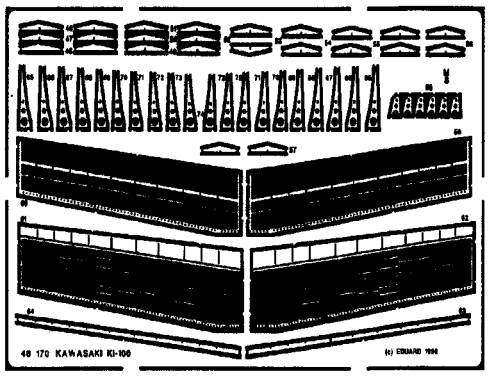

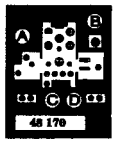

OPPOSITE SIDE

REMOVE

BEND

REPLACE

GRIND

COCKPIT FLOOR

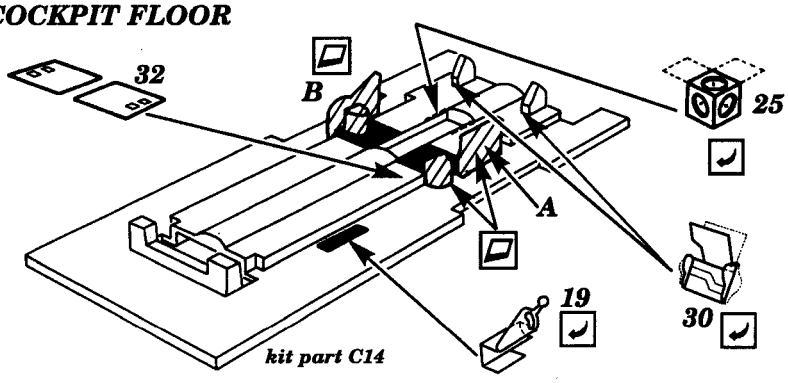

A

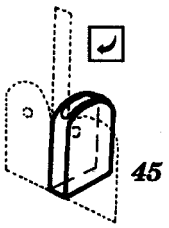

B

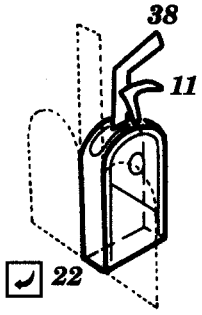

COCKPIT RIGHT SIDE

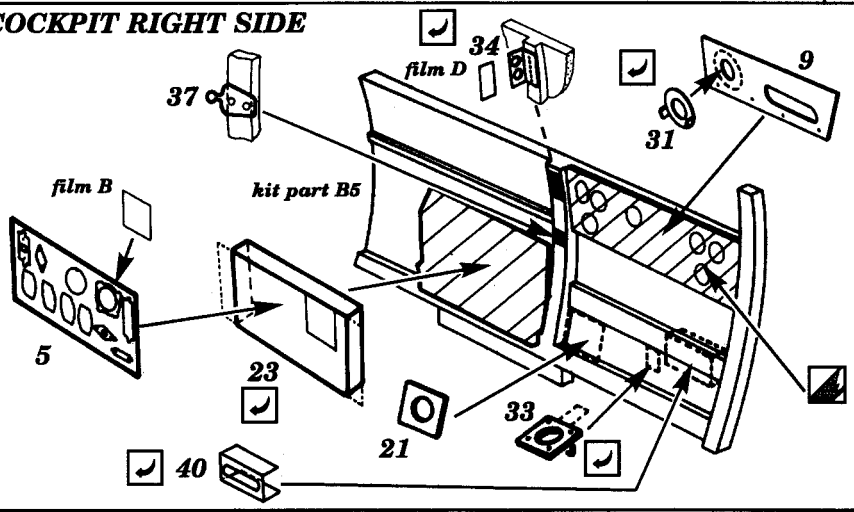

PILOT 'S SEAT

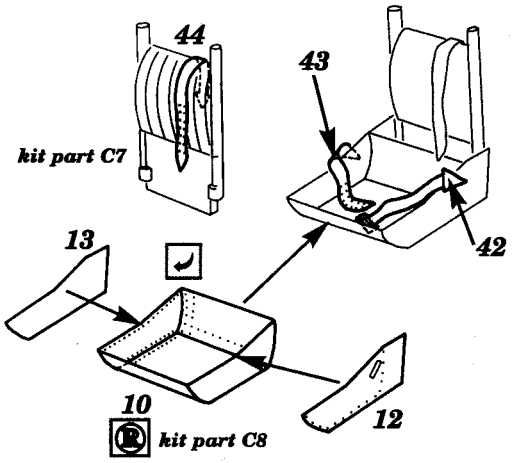

INSTRUMENT PANEL

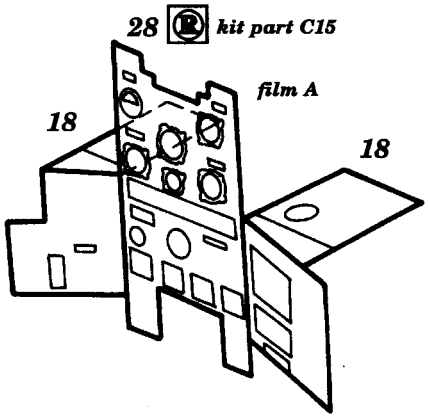

COCKPIT LEFT SIDE

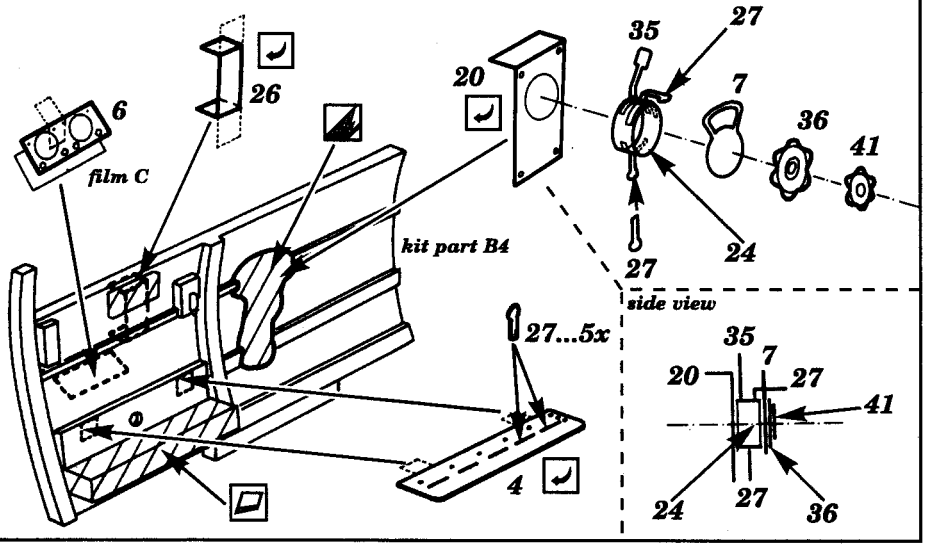

MAIN UC STRUTS

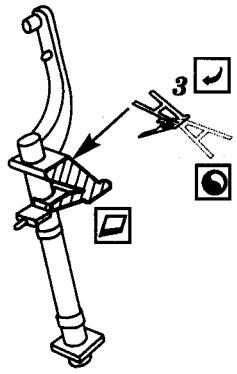

AUXILIARY FUEL TANK

TWO SETS NEEDED

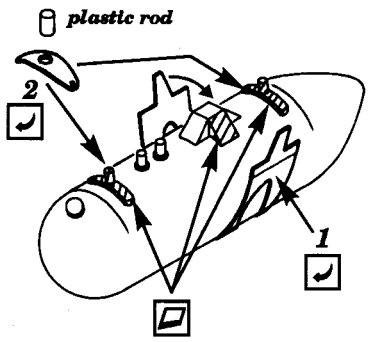

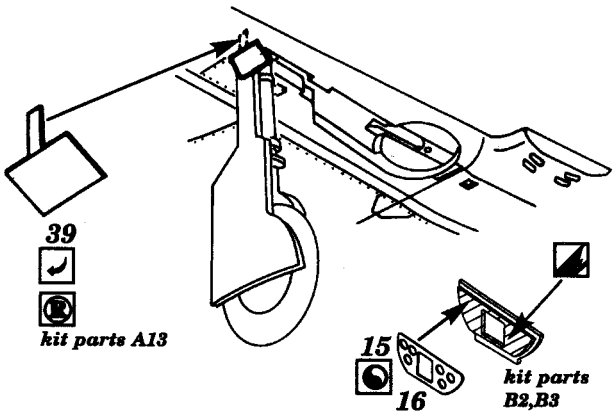

CANOPY

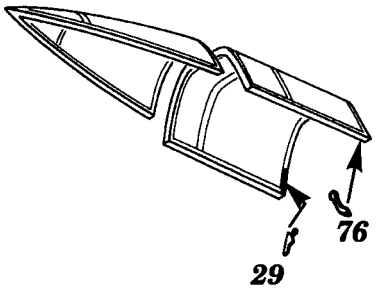

OIL COOLER

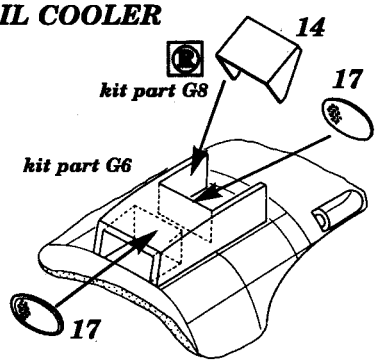

LANDING FLAPS

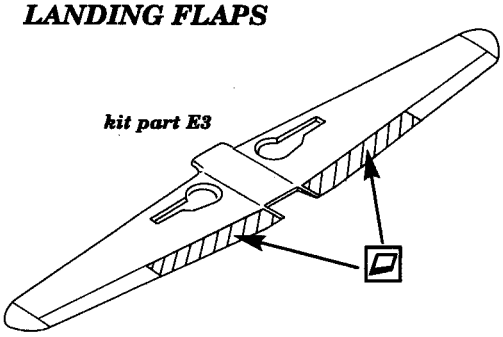

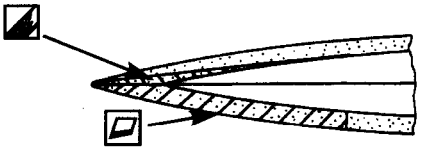

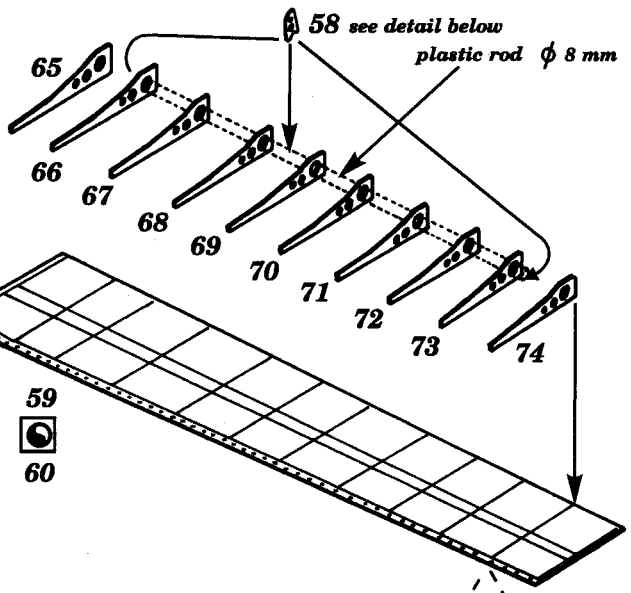

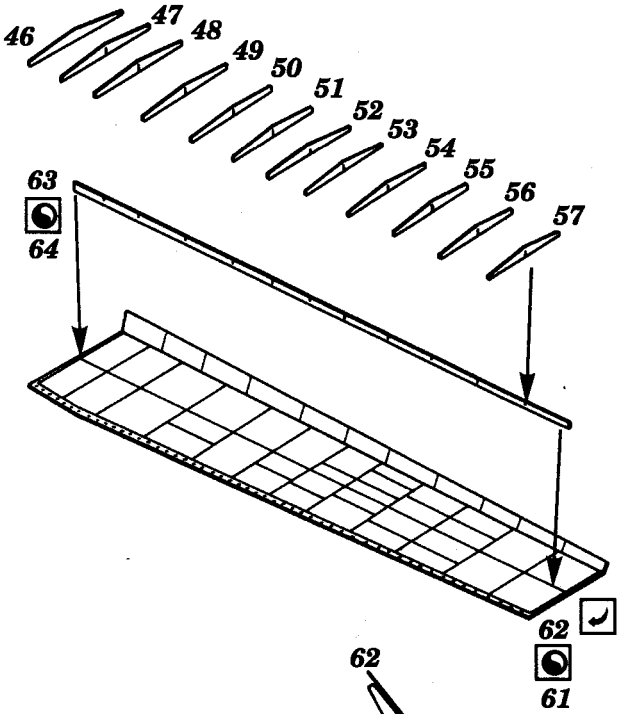

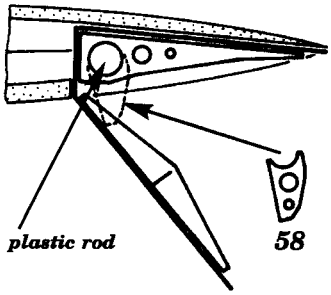

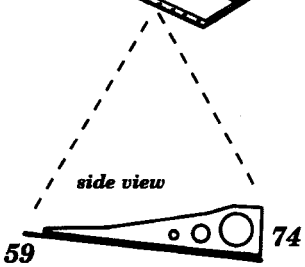

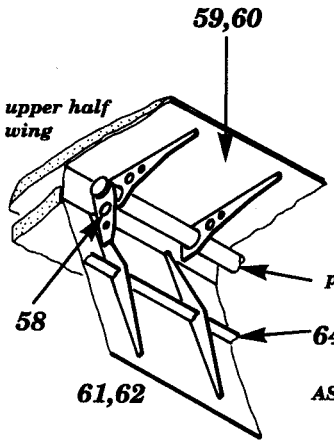

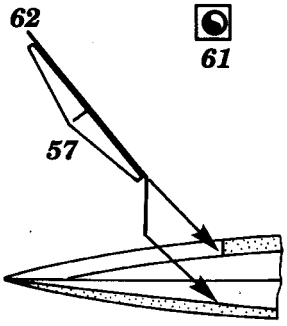

(c) EDUARD M.A. 1996