Merkava Mk.IV

1/35 scale detail set for Academy kit • sada detailů pro model 1/35 Academy

eduard

36 081

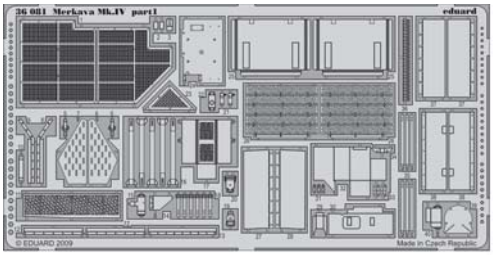

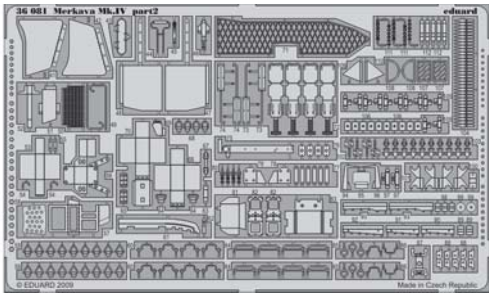

APPLY EXPRESS MASK AND PAINT BEFORE GLUING
POUŽÍT EXPRESS MASK NABARVIT PŘED SLEPENÍM

SYMETRICAL ASSEMBLY
SYMETRICKÁ MONTÁŽ

REMOVE
ODSTRANIT

BEND
OHNOUT

GRIND
OBROUSIT

OPTION
VOLBA

DRILL HOLE
VRTAT OTVOR

REPLACE
NAHRADIT

ORIGINAL KIT PARTS
PŮVODNÍ DÍLY STAVEBNICE

PHOTO-ETCHED PARTS
LEPTANÉ DÍLY

PARTS TO BE REMOVED
DÍLY K ODSTRANĚNÍ

FILL
TMELIT

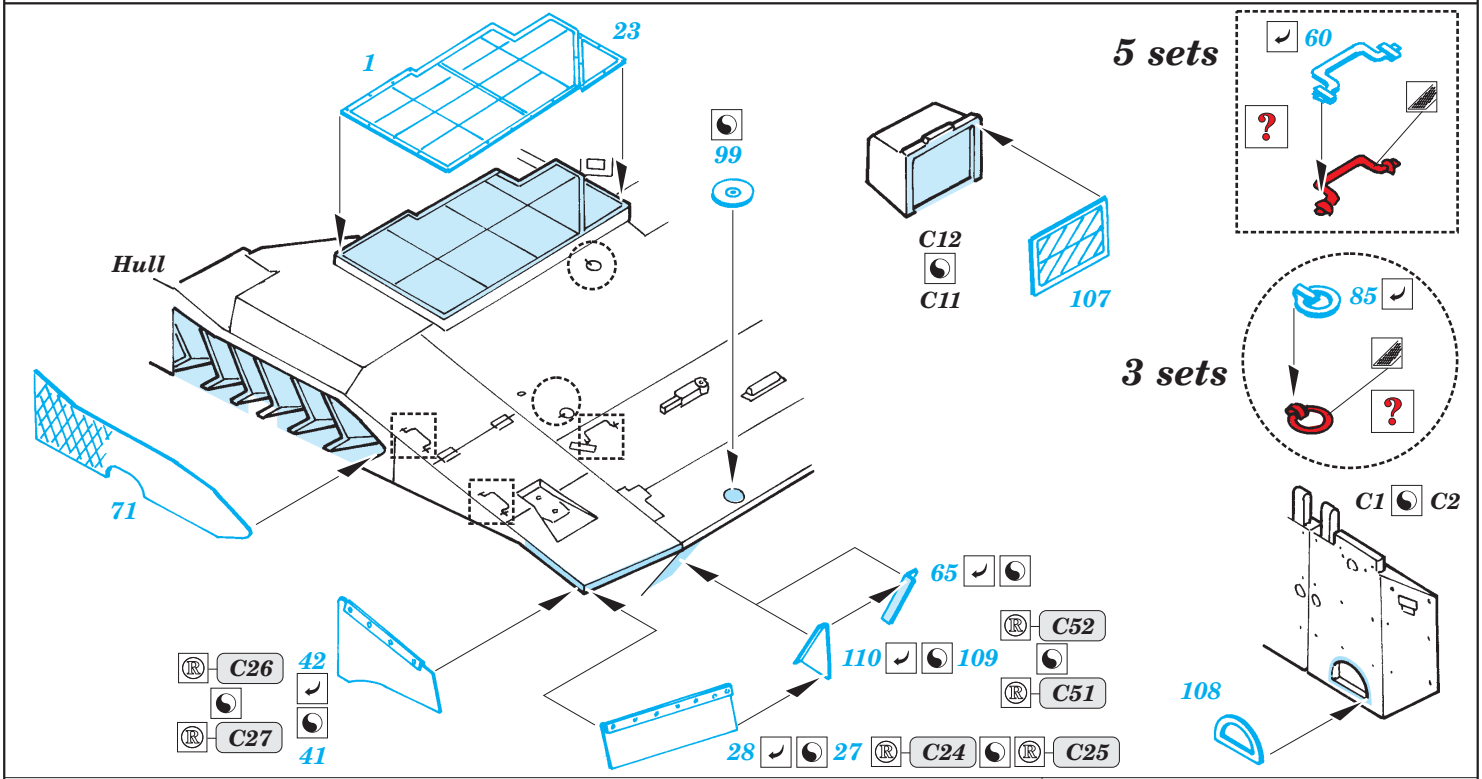

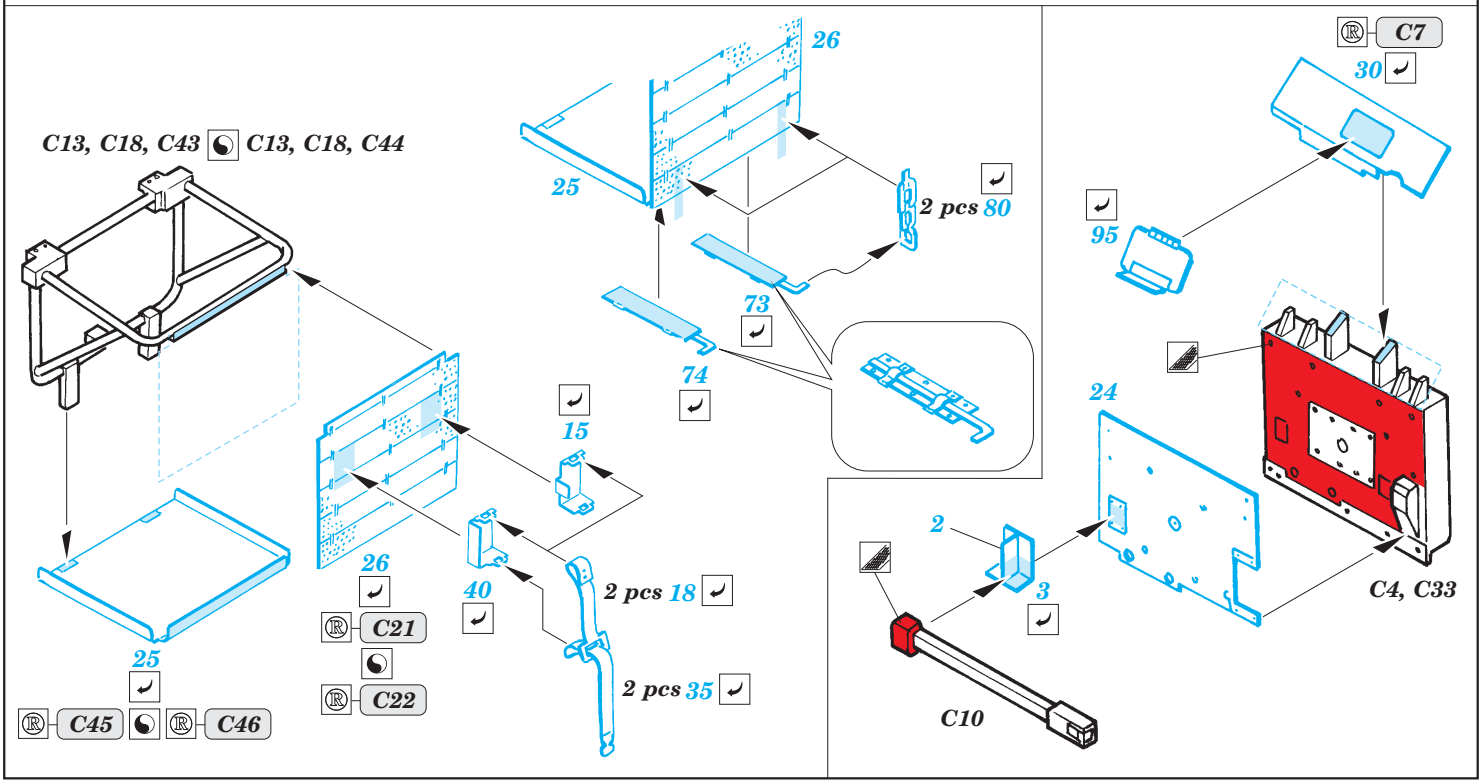

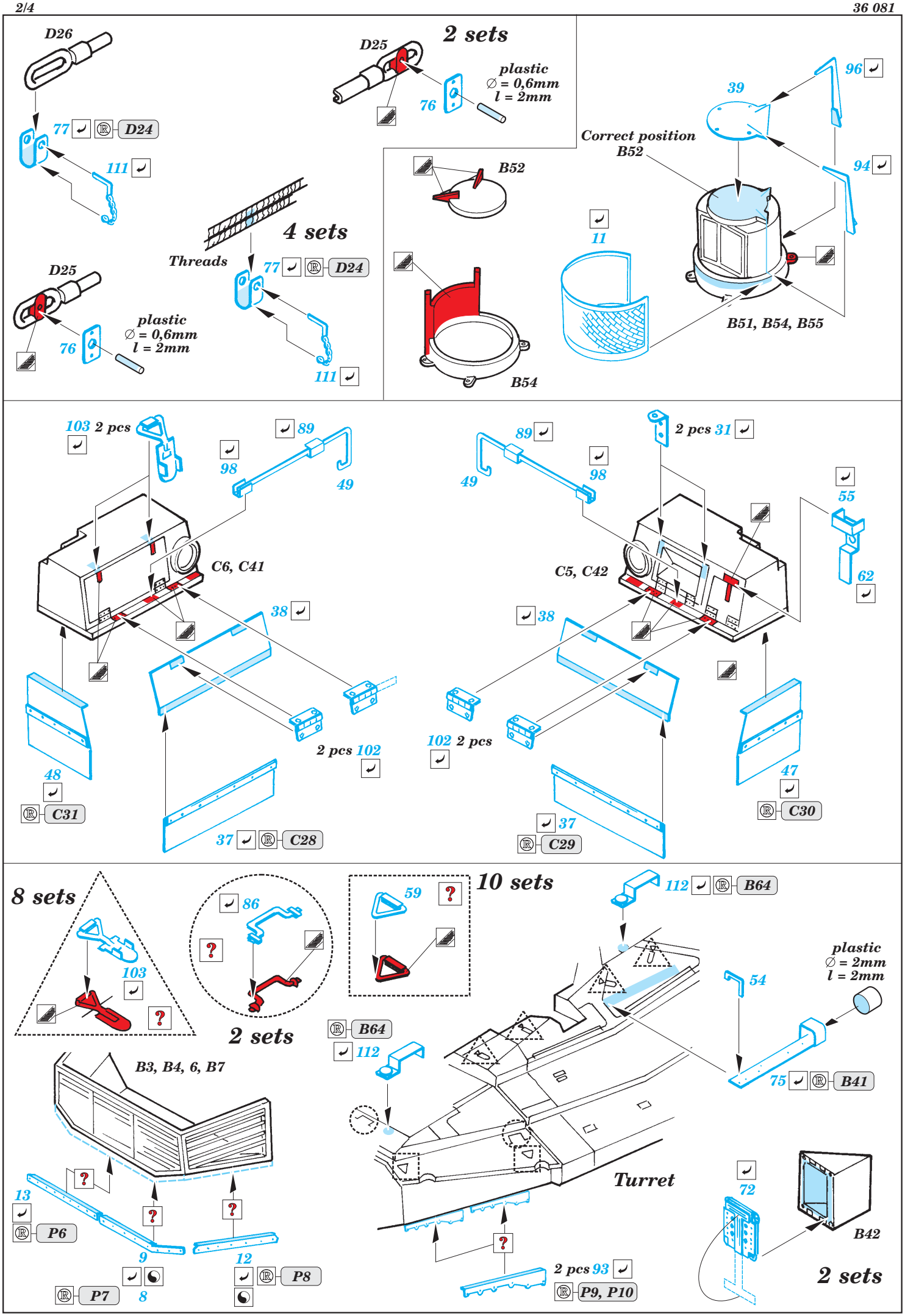
D26
77
D24
111
D25
2 sets
plastic
∅ = 0,6mm
l = 2mm
76
Threads
4 sets
77
D24
D25
plastic
∅ = 0,6mm
l = 2mm
76
111
B52
Correct position
B52
39
96
94
11
B54
B51, B54, B55
103 2 pcs
89
98
49
C6, C41
38
2 pcs 102
48
C31
37
C28
89
49
98
2 pcs 31
55
62
C5, C42
38
102 2 pcs
47
C30
37
C29
8 sets
103
86
59
10 sets
112
B64
plastic
∅ = 2mm
l = 2mm
54
2 sets
B3, B4, 6, B7
B64
112
75
B41
13
P6
9
P7
8
12
P8
Turret
72
B42
2 pcs 93
P9, P10
2 sets

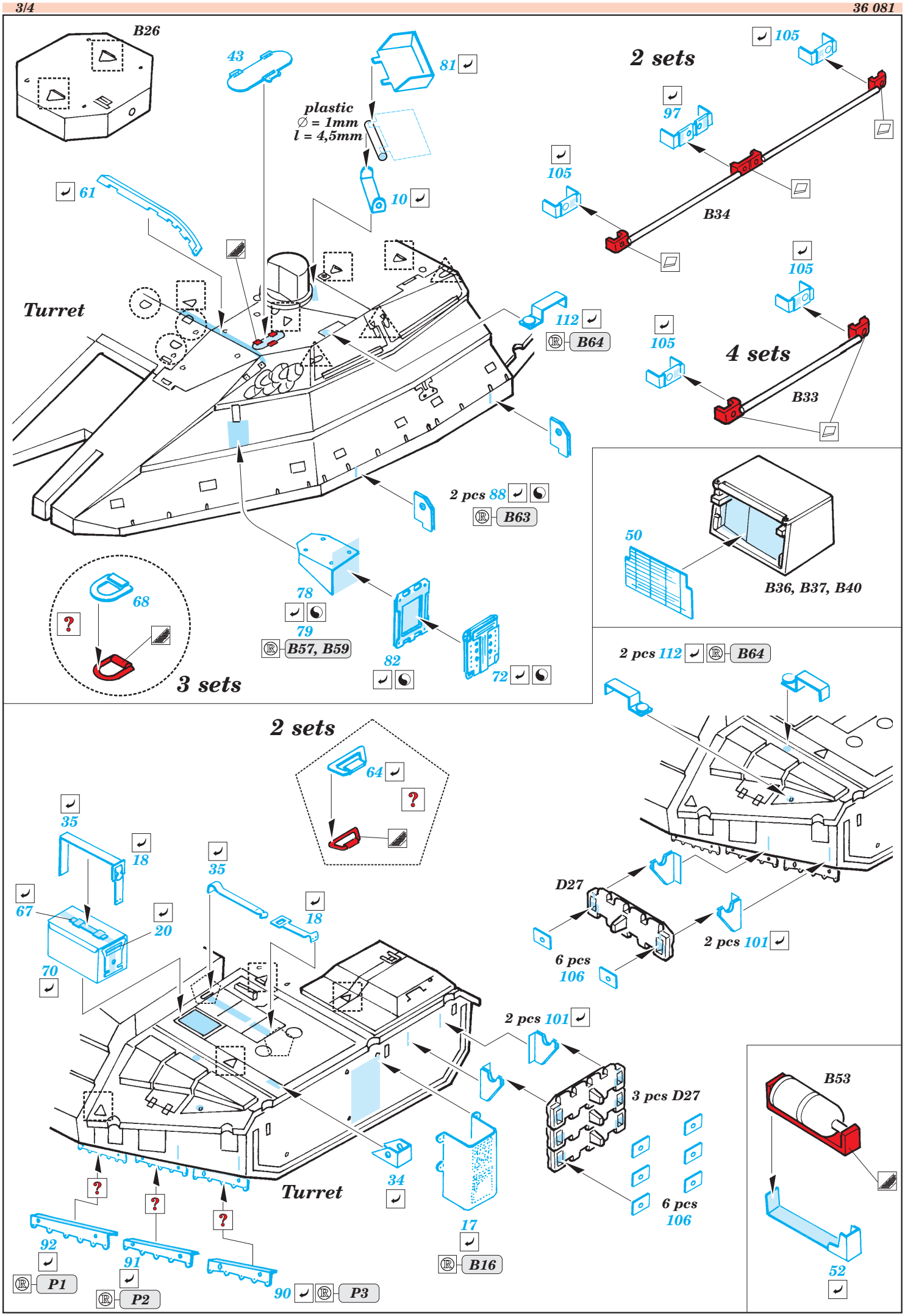
B26
43
81
plastic
∅ = 1mm
l = 4,5mm
10
61
Turret
112
B64
2 pcs 88
B63
78
79
B57, B59
82
72
68
3 sets
2 sets
105
97
105
B34
105
4 sets
105
B33
50
B36, B37, B40
2 pcs 112
B64
2 sets
64
35
18
67
20
70
35
18
D27
2 pcs 101
6 pcs
106
2 pcs 101
3 pcs D27
6 pcs
106
Turret
34
17
B16
92
P1
91
P2
90
P3
B53
52

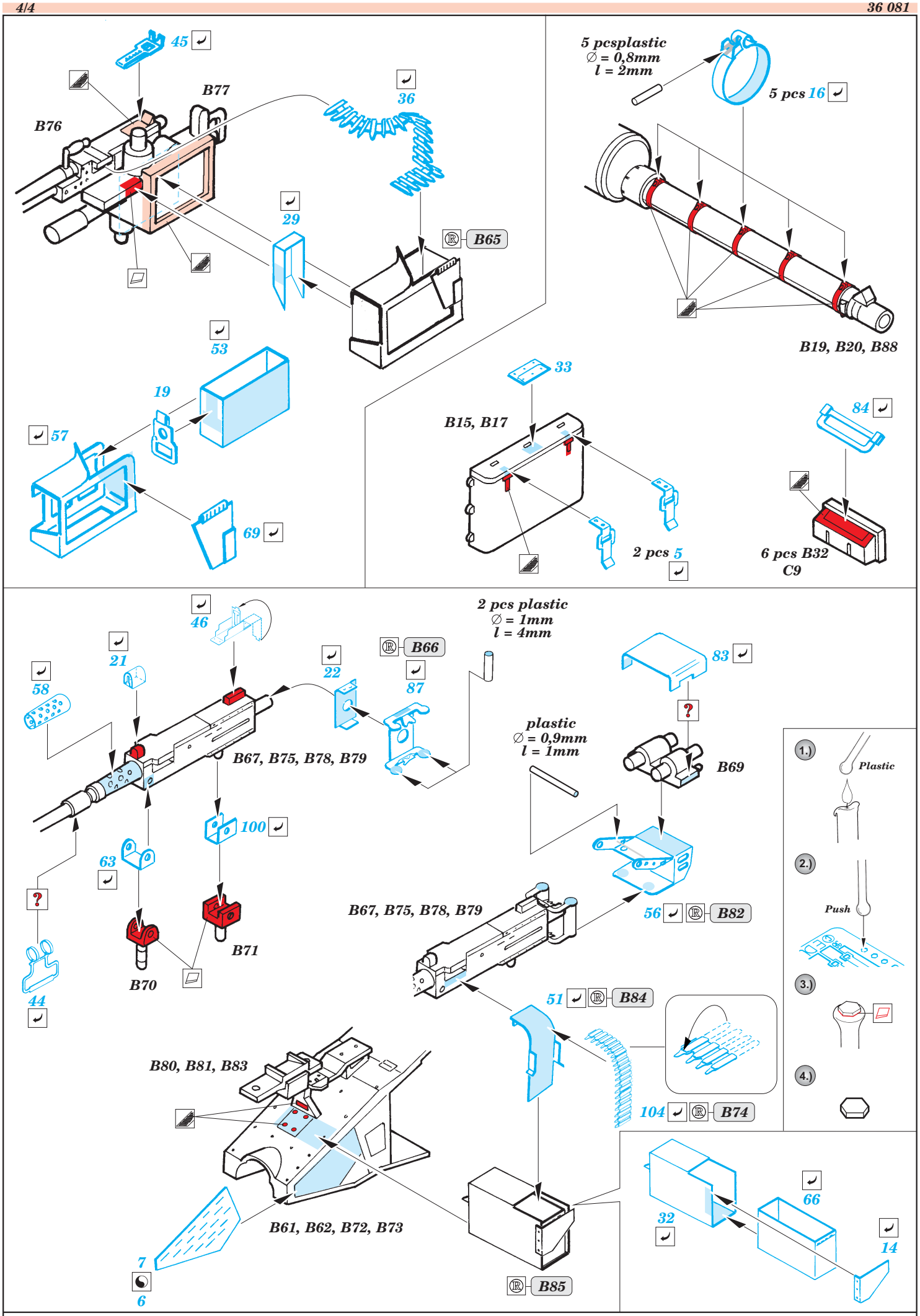
45
B76
B77
36
29
B65
53
19
57
69
5 pcsplastic
∅ = 0,8mm
l = 2mm
5 pcs 16
B19, B20, B88
33
B15, B17
2 pcs 5
84
6 pcs B32
C9
46
21
58
22
B66
87
2 pcs plastic
∅ = 1mm
l = 4mm
83
B67, B75, B78, B79
plastic
∅ = 0,9mm
l = 1mm
B69
100
63
B71
B70
44
B67, B75, B78, B79
56
B82
51
B84
B80, B81, B83
104
B74
B61, B62, B72, B73
7
6
B85
32
66
14
1.)
Plastic
2.)
Push
3.)
4.)