Sd.Kfz.124 Wespe

1/35 scale detail set for ALAN kit • sada detailů pro model 1/35 ALAN

eduard

35 816

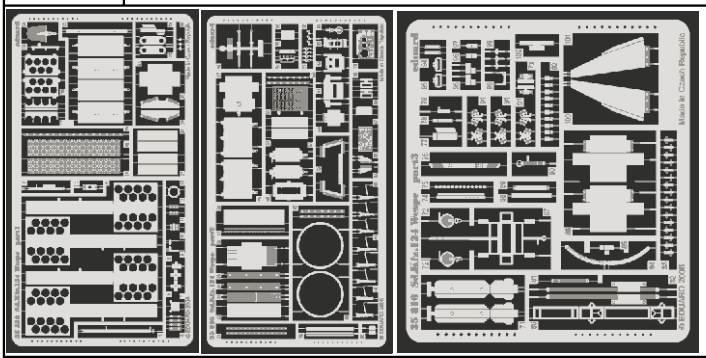

print

35 816
Sd.Kfz.124 Wespe

APPLY EXPRESS MASK AND PAINT BEFORE GLUING
POUŽÍT EXPRESS MASK NABARVIT PŘED SLEPENÍM
SYMETRICAL ASSEMBLY
SYMETRICKÁ MONTÁŽ
REMOVE
ODSTRANIT
GRIND
OBROUSIT
DRILL HOLE
VRTAT OTVOR
BEND
OHNOUT
OPTION
VOLBA
REPLACE
NAHRADIT

ORIGINAL KIT PARTS
PŮVODNÍ DÍLY STAVEBNICE
PHOTO-ETCHED PARTS
LEPTANÉ DÍLY
PARTS TO BE REMOVED
DÍLY K ODSTRANĚNÍ
FILL
TMELIT

2 pcs

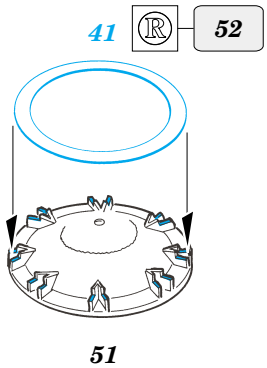

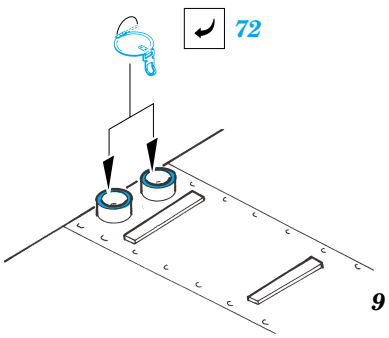

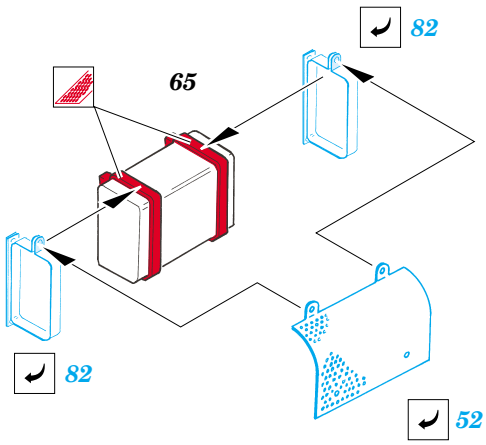

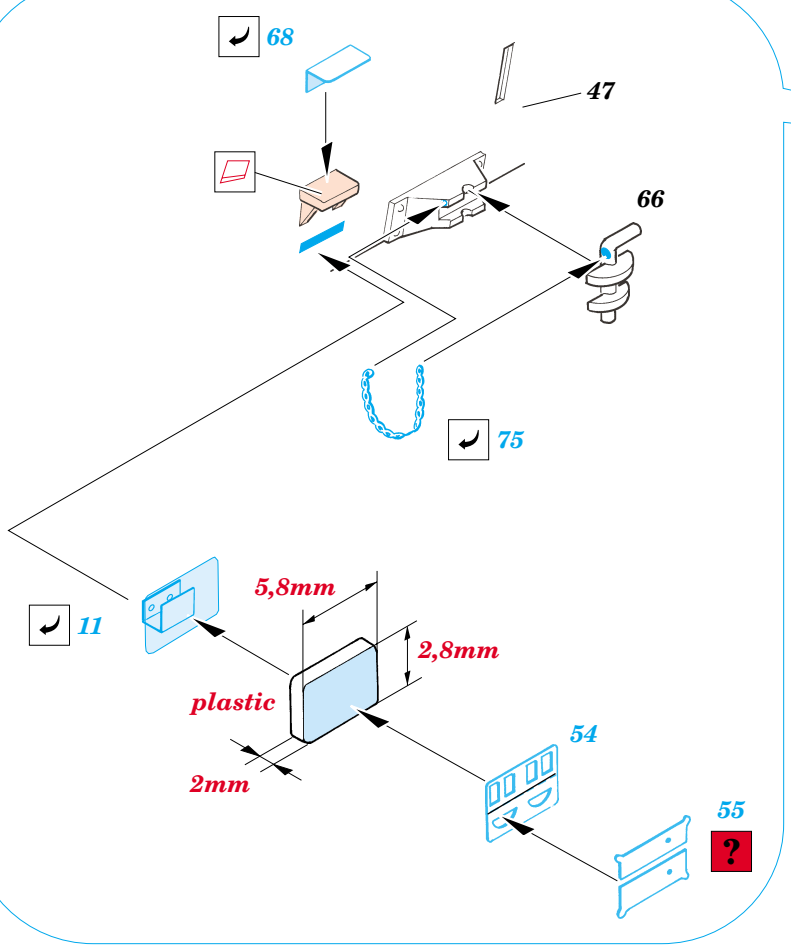

REFERENCES:

Military Ordonance Spec. Number 18 - Wespe
Model Time No. 62 - Sept.2001
WWP, Spec.Museum Line No.20 - Wespe in Detail
Kagero Publ. No.8 - Wespe Sd.Kfz 124

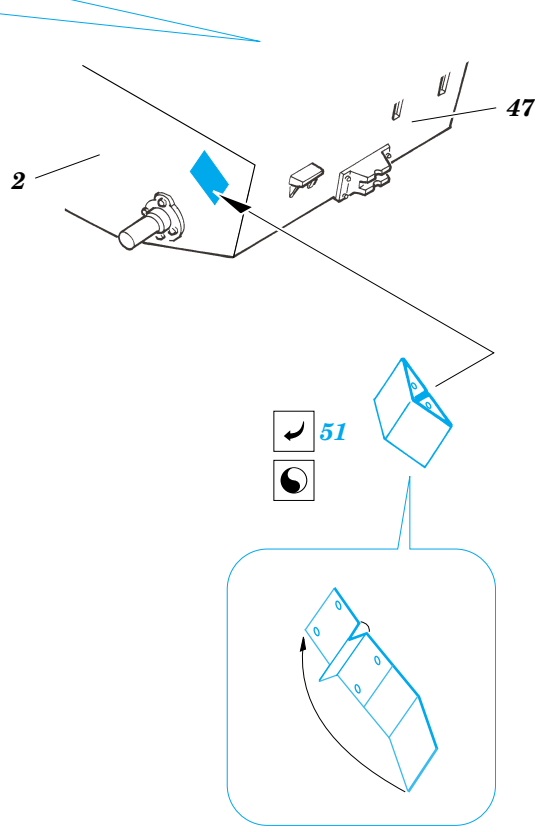

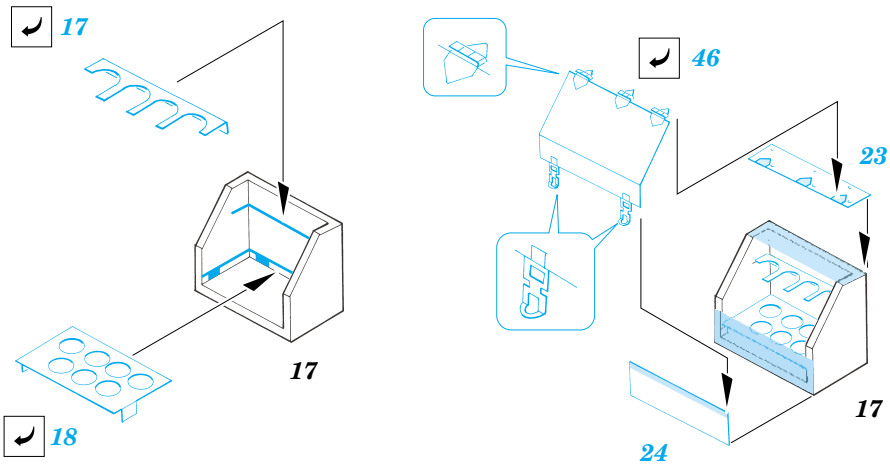
17
17
18
46
23
17
24

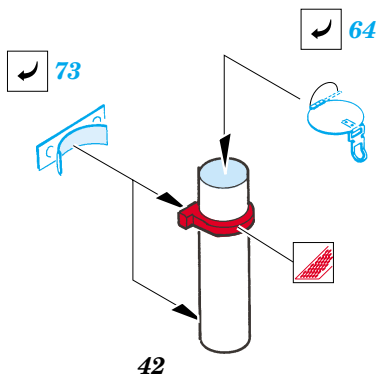
64
73
42

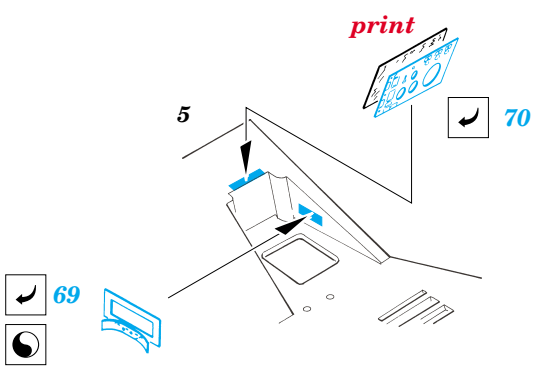
print
5
70
69

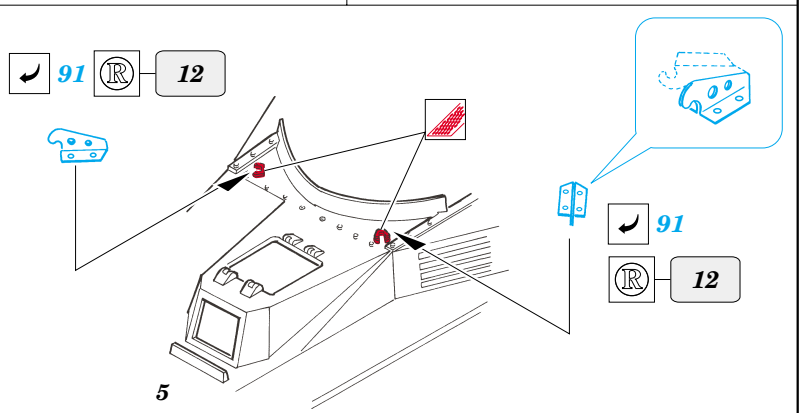
91
12
5
91
12

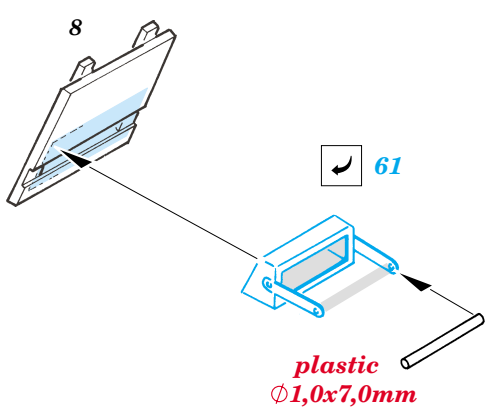
8
61
plastic
∅1,0x7,0mm

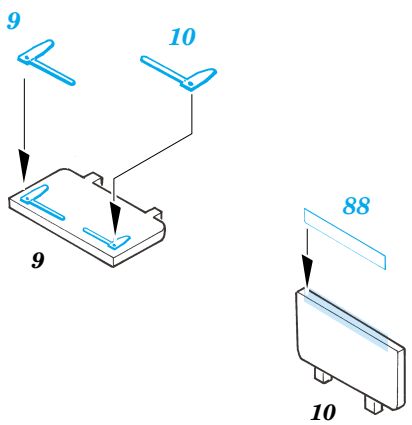
9
10
9
88
10

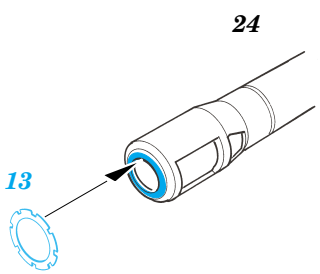
24
13

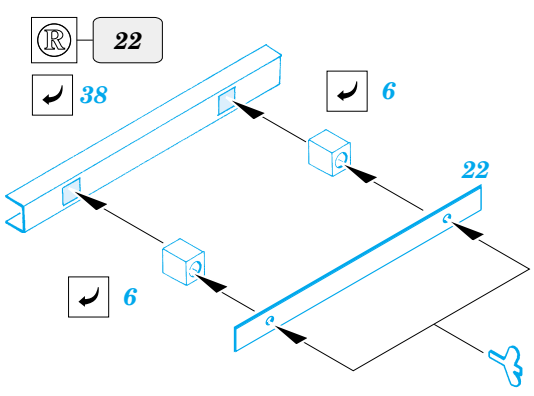
22
38
6
22
6
99

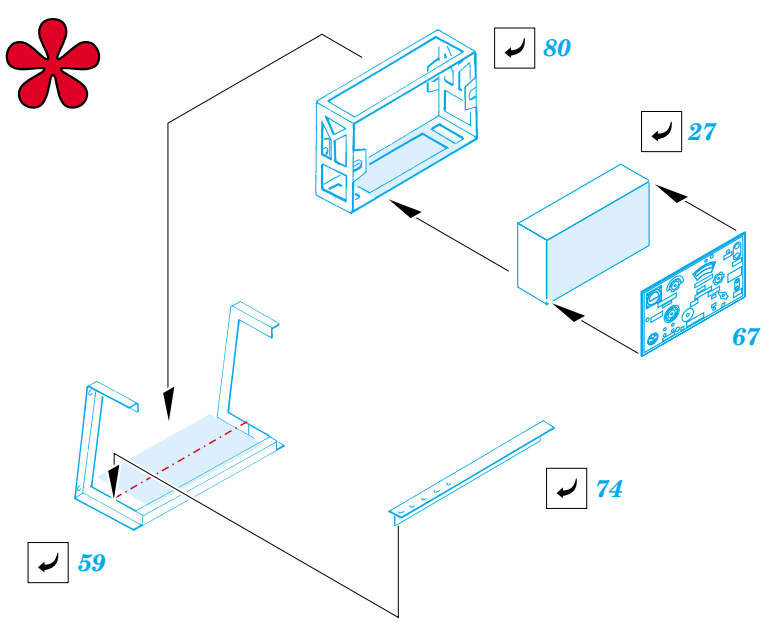
80
27
67
74
59

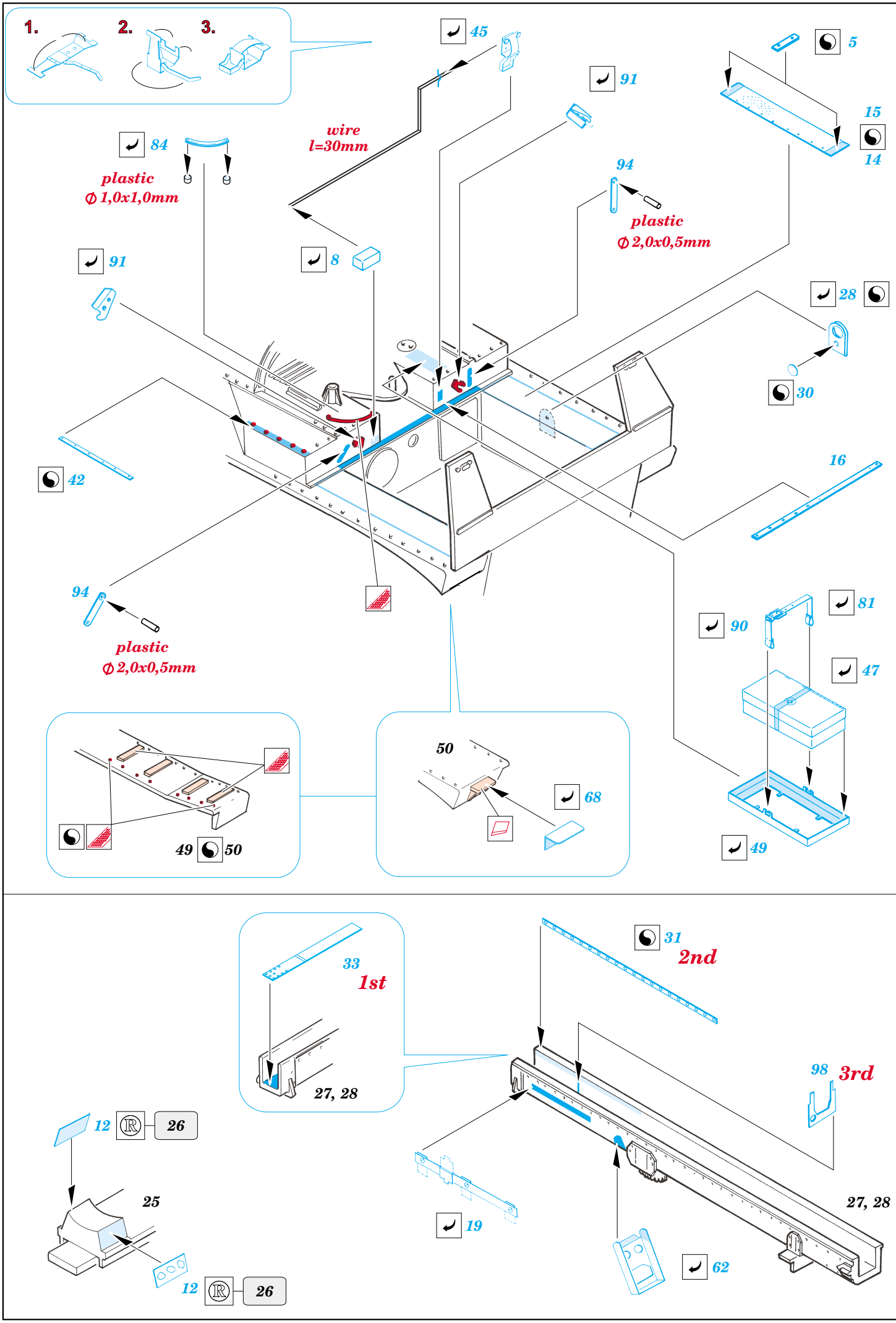
1.
2.
3.
45
91
5
15
14
84
plastic
Ø 1,0x1,0mm
wire
l=30mm
94
plastic
Ø 2,0x0,5mm
91
8
28
30
42
16
94
plastic
Ø 2,0x0,5mm
81
90
47
49
50
49 50
50
68
33
1st
27, 28
31
2nd
98
3rd
12
26
25
12
26
19
27, 28
62

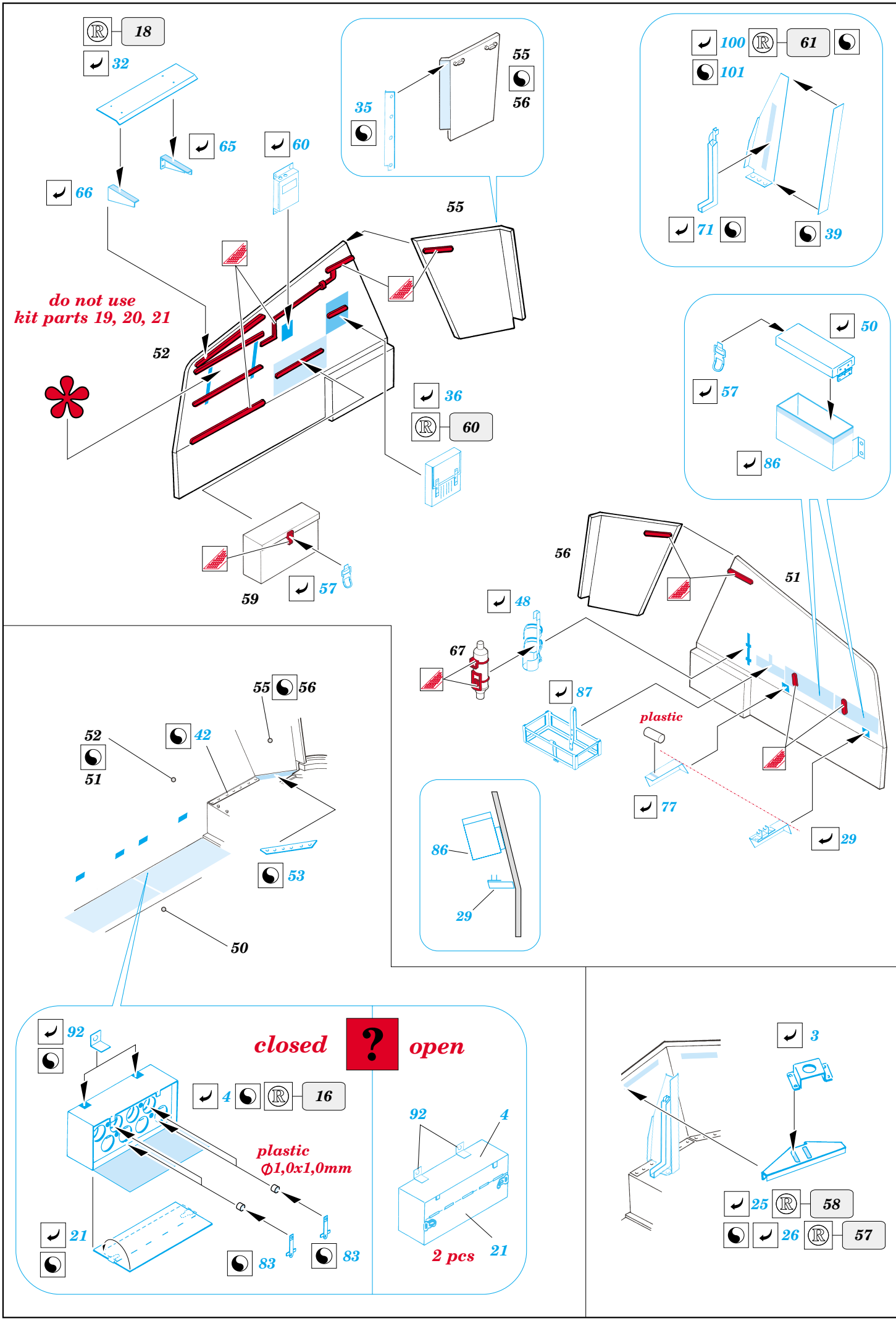
18
32
65
60
66
35
55
56
55
do not use
kit parts 19, 20, 21
52
36
60
59
57
100
61
101
71
39
50
57
86
56
51
48
67
87
plastic
77
29
55
56
52
42
51
53
50
86
29
92
closed
?
open
4
16
plastic
Ø1,0x1,0mm
21
83
83
92
4
2 pcs
21
3
25
58
26
57

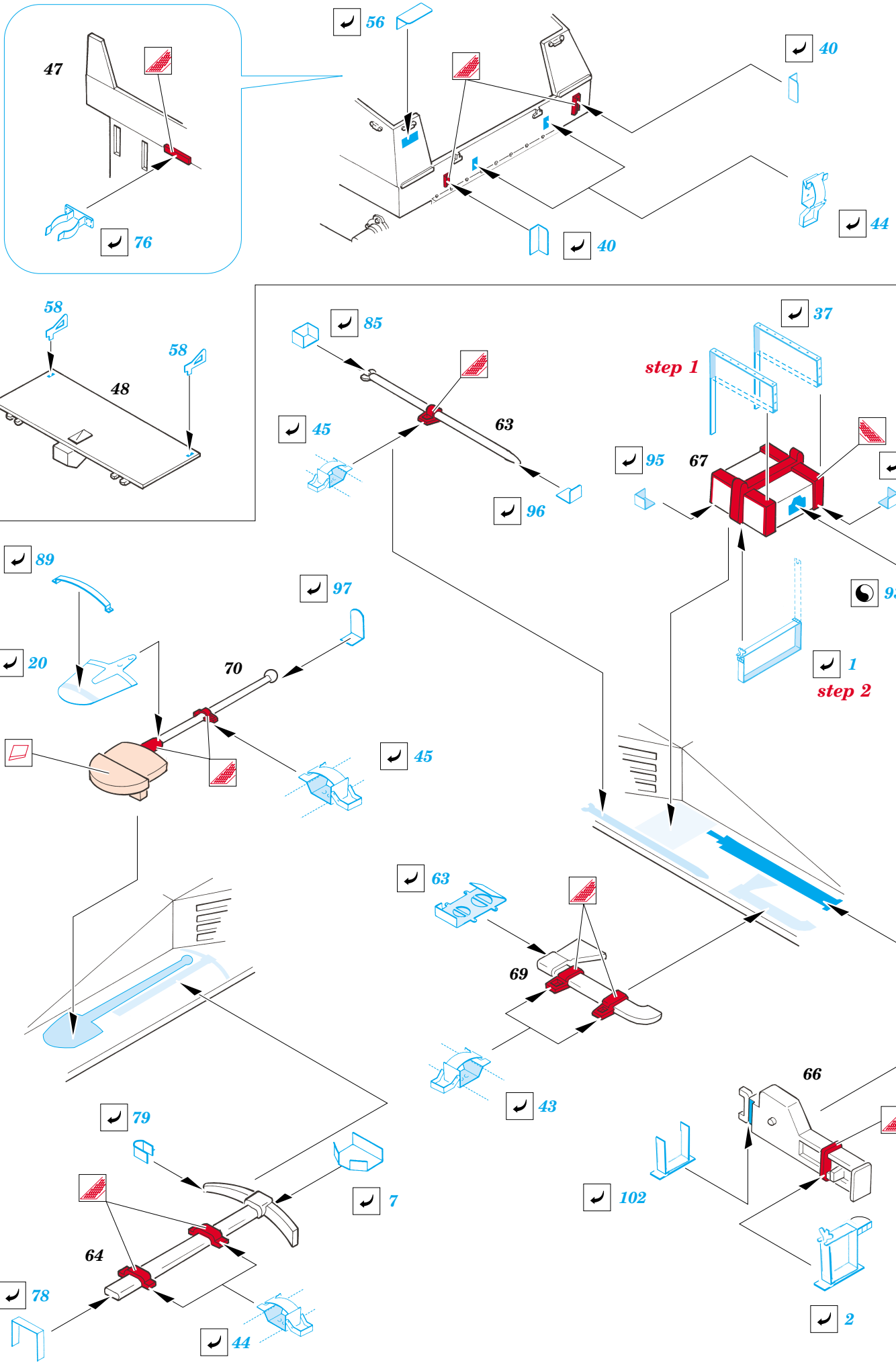

© EDUARD M.A. 2006