HUMMER with M242

1/35 scale detail set for Tamiya kit

35 209

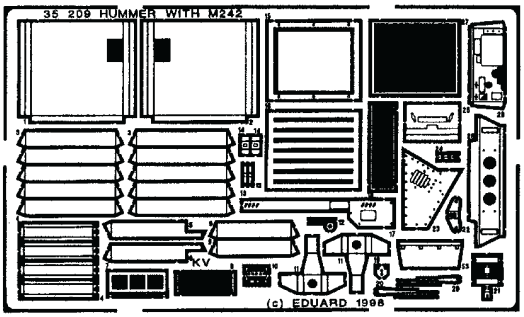

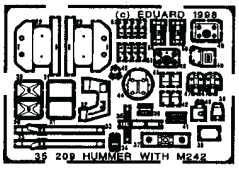

OPPOSITE SIDE

REMOVE

REPLACE

GRIND

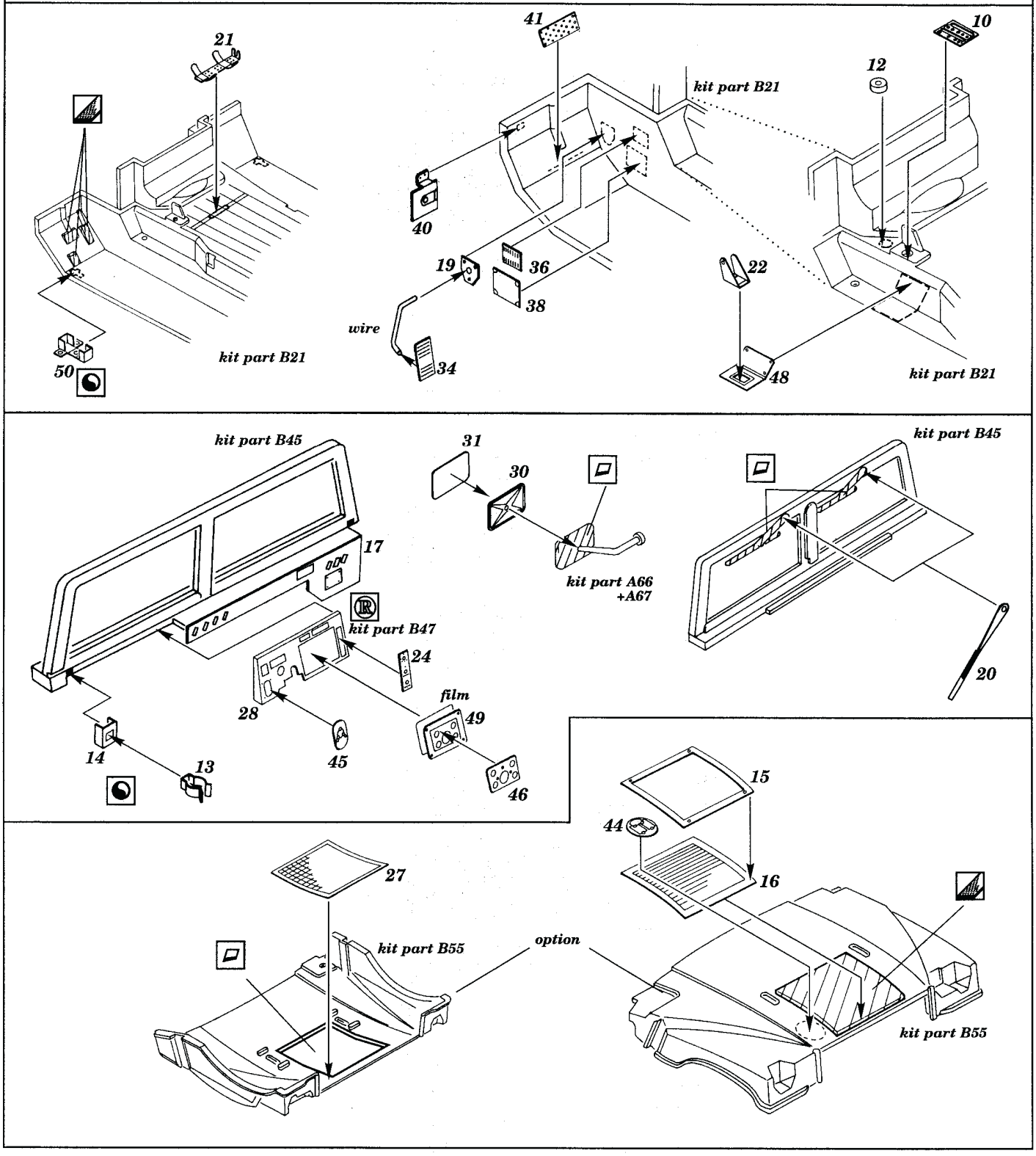

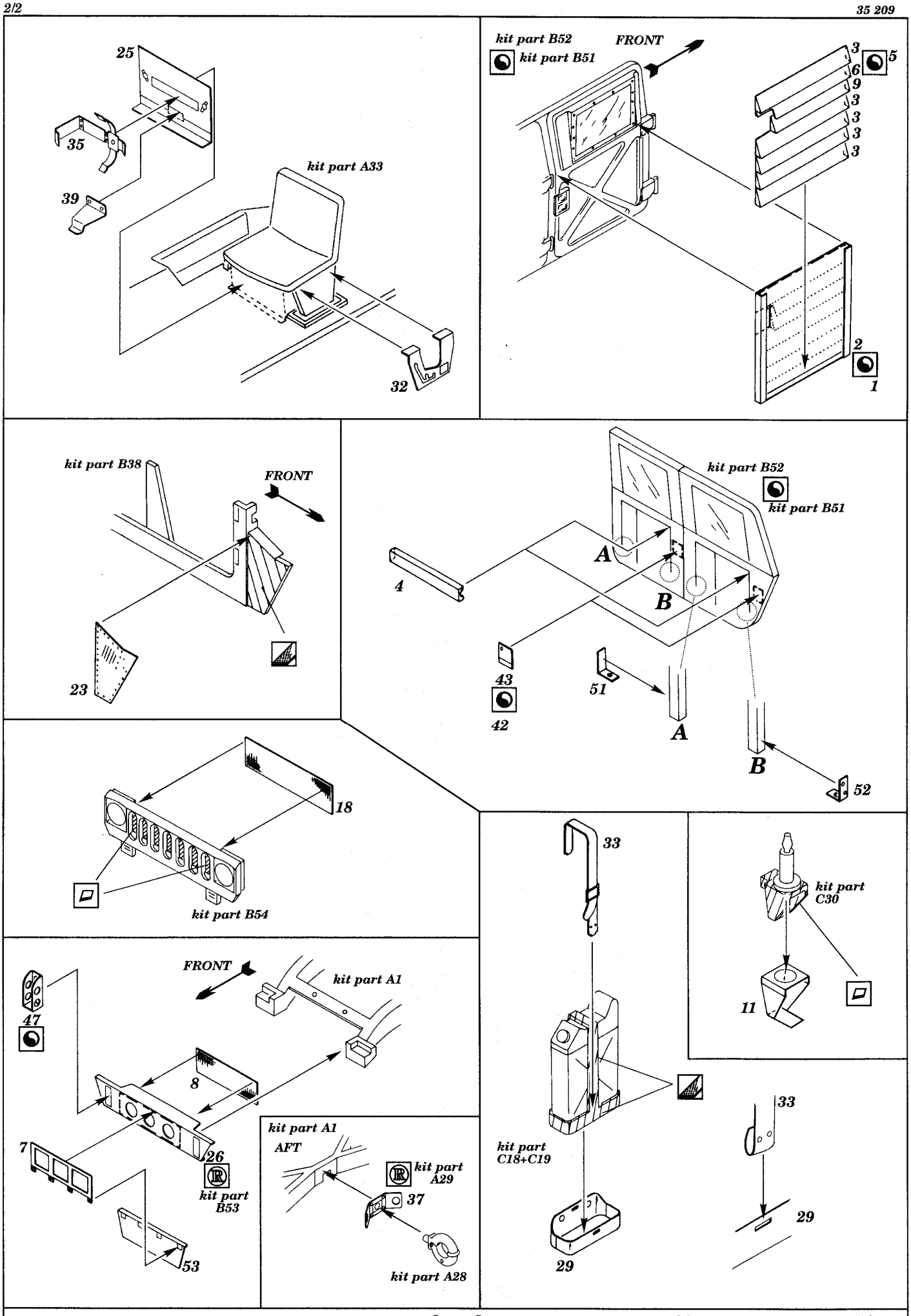
25
35
39
kit part A33
32
kit part B52
kit part B51
FRONT
3
6
9
3
3
3
3
5
2
1
kit part B38
FRONT
23
kit part B52
kit part B51
A
B
4
43
42
51
A
B
52
18
kit part B54
33
kit part C30
11
FRONT
kit part A1
47
8
7
26
kit part B53
53
kit part A1
AFT
kit part A29
37
kit part A28
kit part C18+C19
29
33
29