JAGDTIGER (Sd.Kfz.186)

1/35 scale detail set for Revell kit

35 197

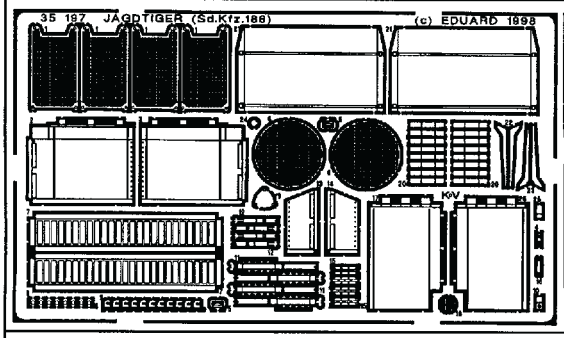

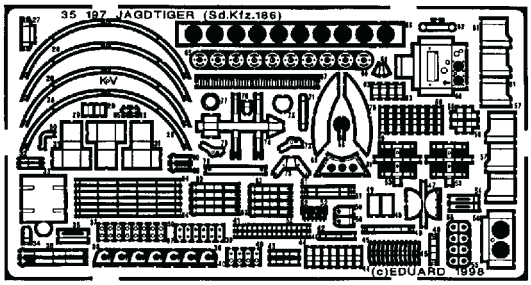

OPPOSITE SIDE
REMOVE
REPLACE
GRIND

35 197

kit part B5
kit part C3
kit part B4
kit part C6
final assembly
plastic
kit part C4
kit part C5
kit part C8
kit part C9
kit part C11+C12
kit part C1
kit part C2
kit part C18
kit part C19

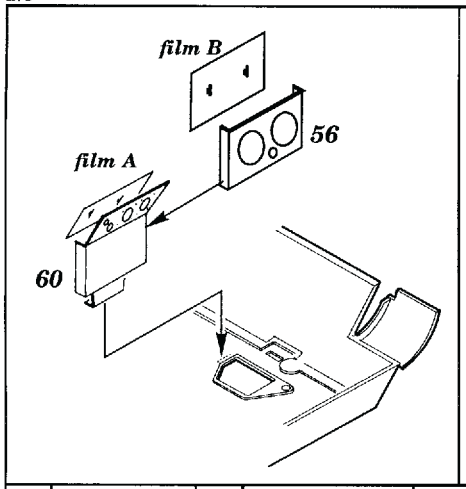
film B
56
film A
60

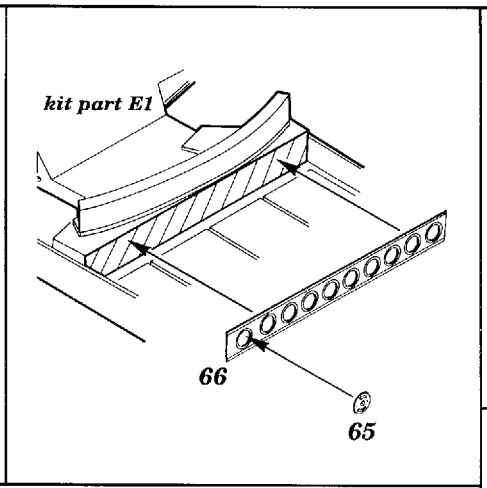
kit part E1
66
65

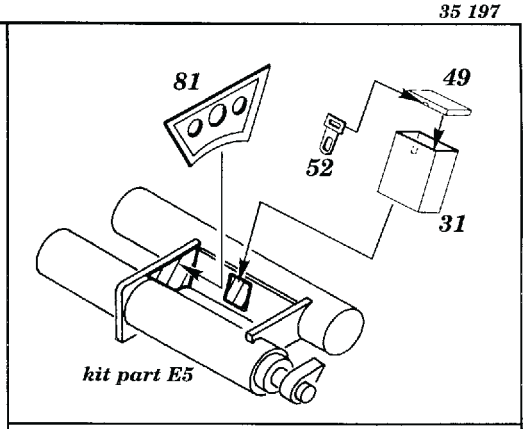
81
49
52
31
kit part E5

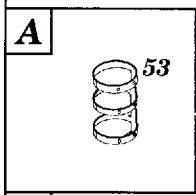
A
53

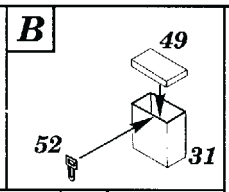
B
49
52
31

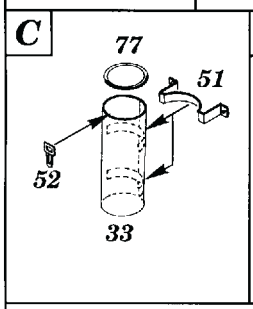
C
77
51
52
33

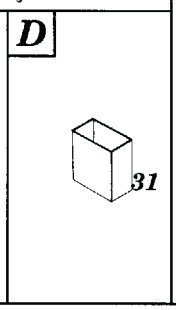
D
31

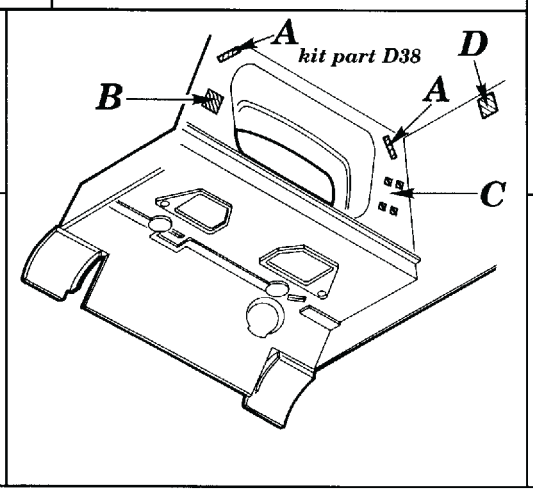
A
kit part D38
D
B
A
C

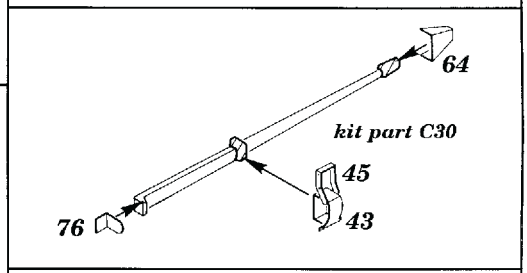
64
kit part C30
45
76
43

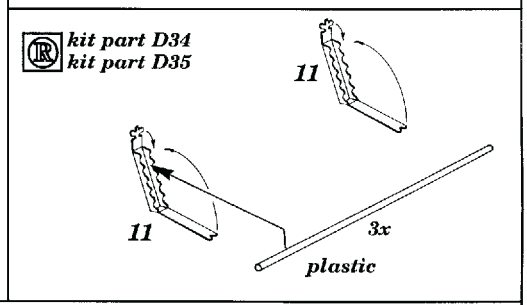
kit part D34
kit part D35
11
11
3x
plastic

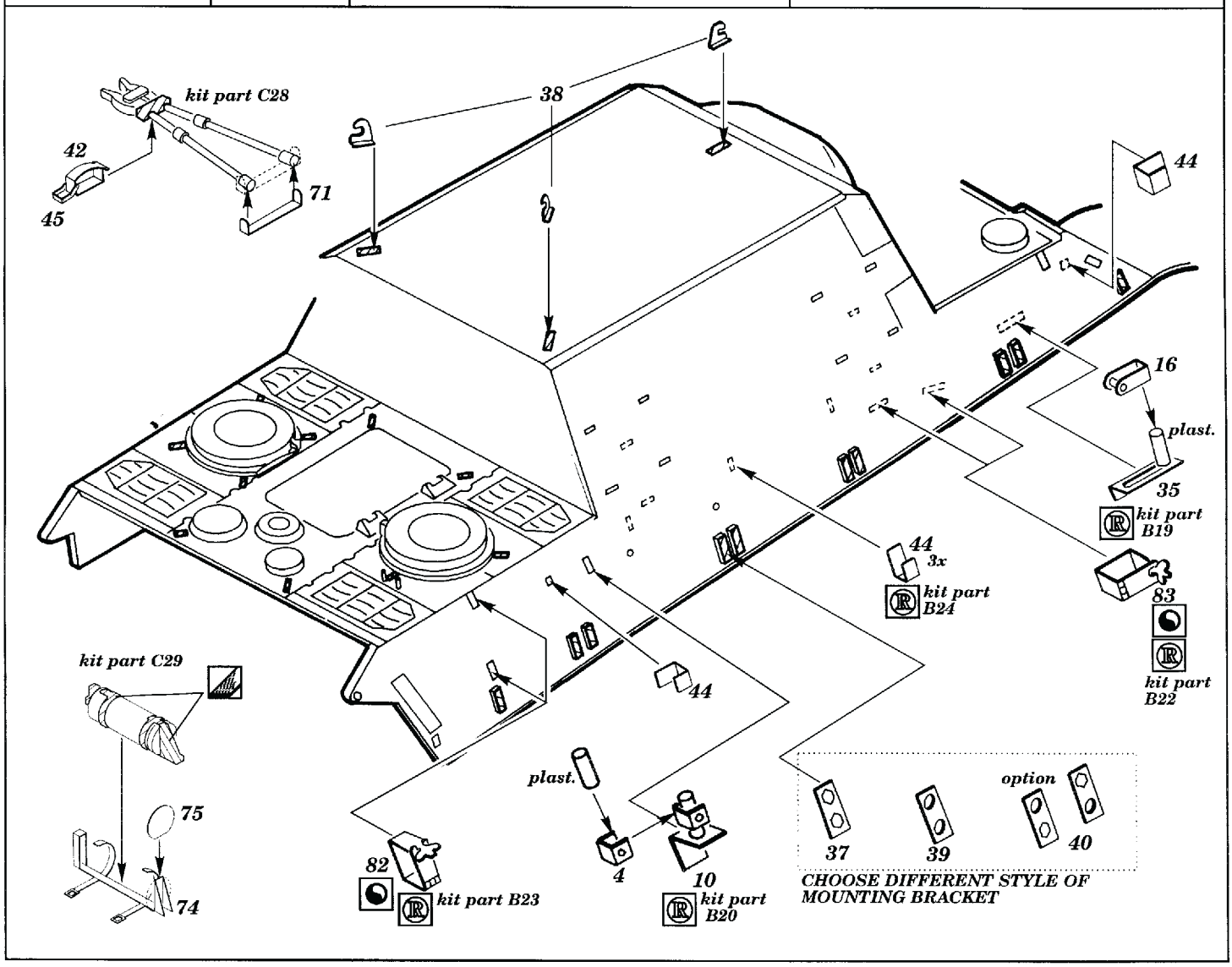
kit part C28
42
45
71
38
44
16
plast.
35
kit part B19
44
3x
kit part B24
83
kit part B22
44
kit part C29
75
74
plast.
4
10
kit part B20
82
kit part B23
option
37
39
40
CHOOSE DIFFERENT STYLE OF MOUNTING BRACKET

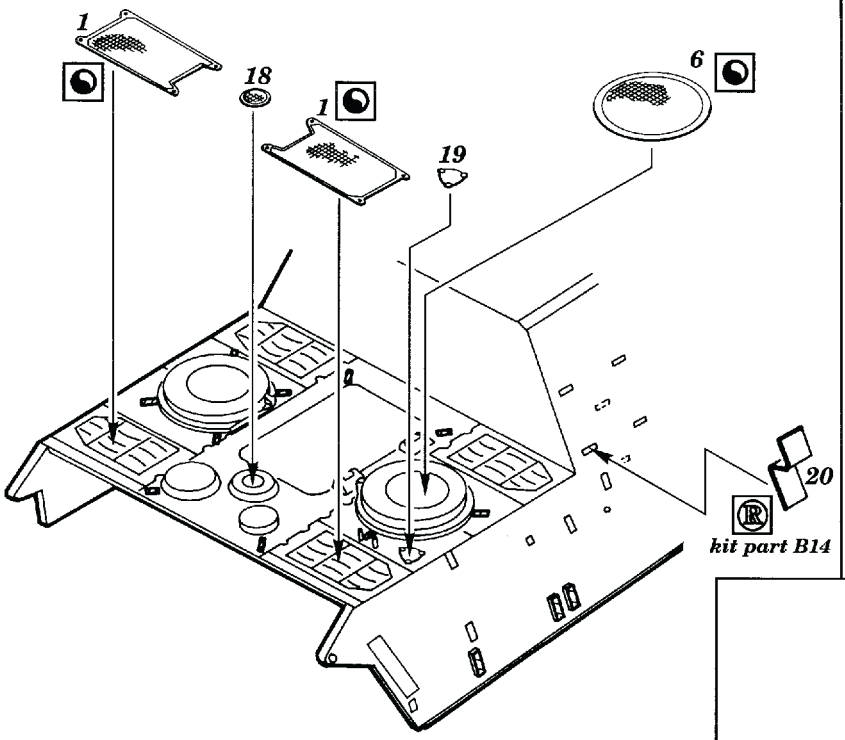
1
18
1
19
6
20
kit part B14

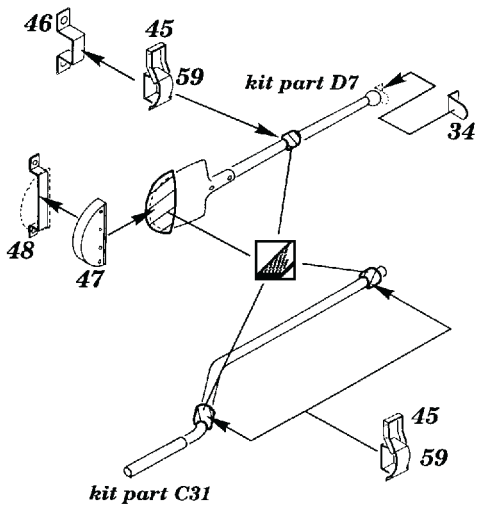
46
45
59
kit part D7
34
48
47
45
59
kit part C31

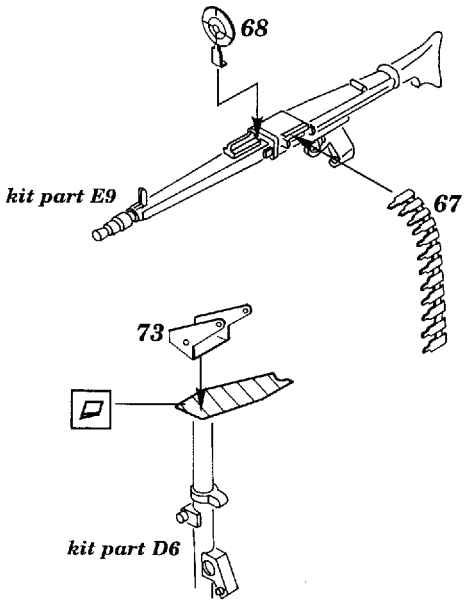
68
kit part E9
67
73
kit part D6

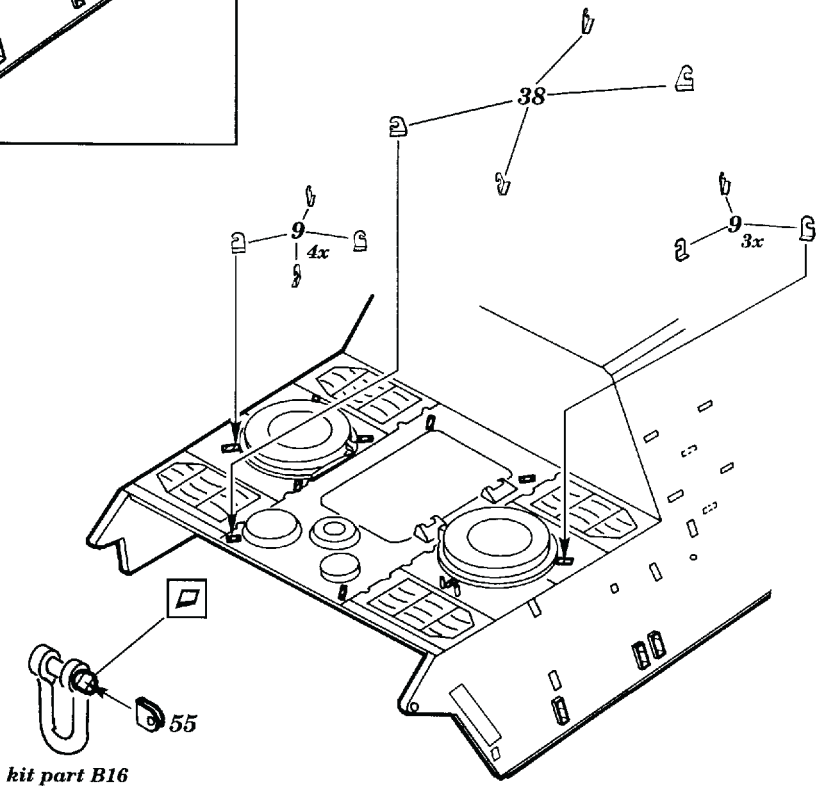
38
9
4x
9
3x
55
kit part B16

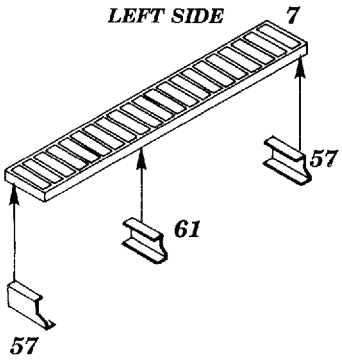
LEFT SIDE
7
57
61
57

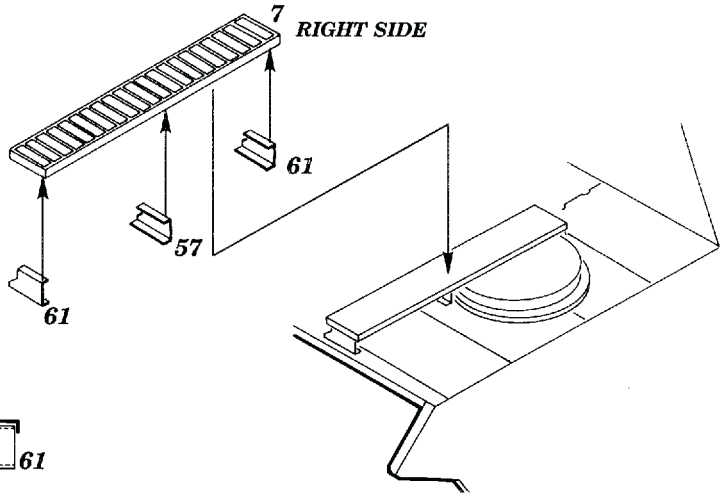
7
RIGHT SIDE
61
57
61

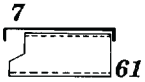
7
61