SHERMAN Vc FIREFLY

1/35 scale detail set for Dragon kit

35 195

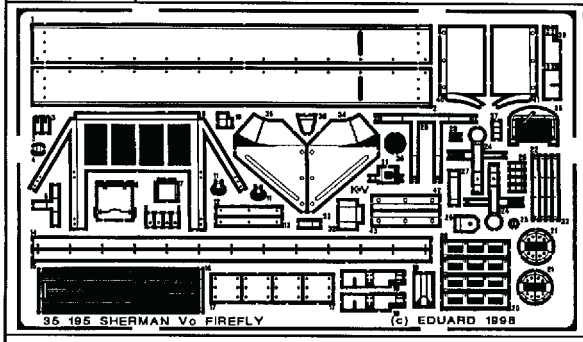

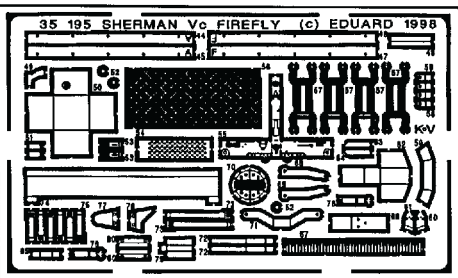

OPPOSITE SIDE
REMOVE
REPLACE
GRIND

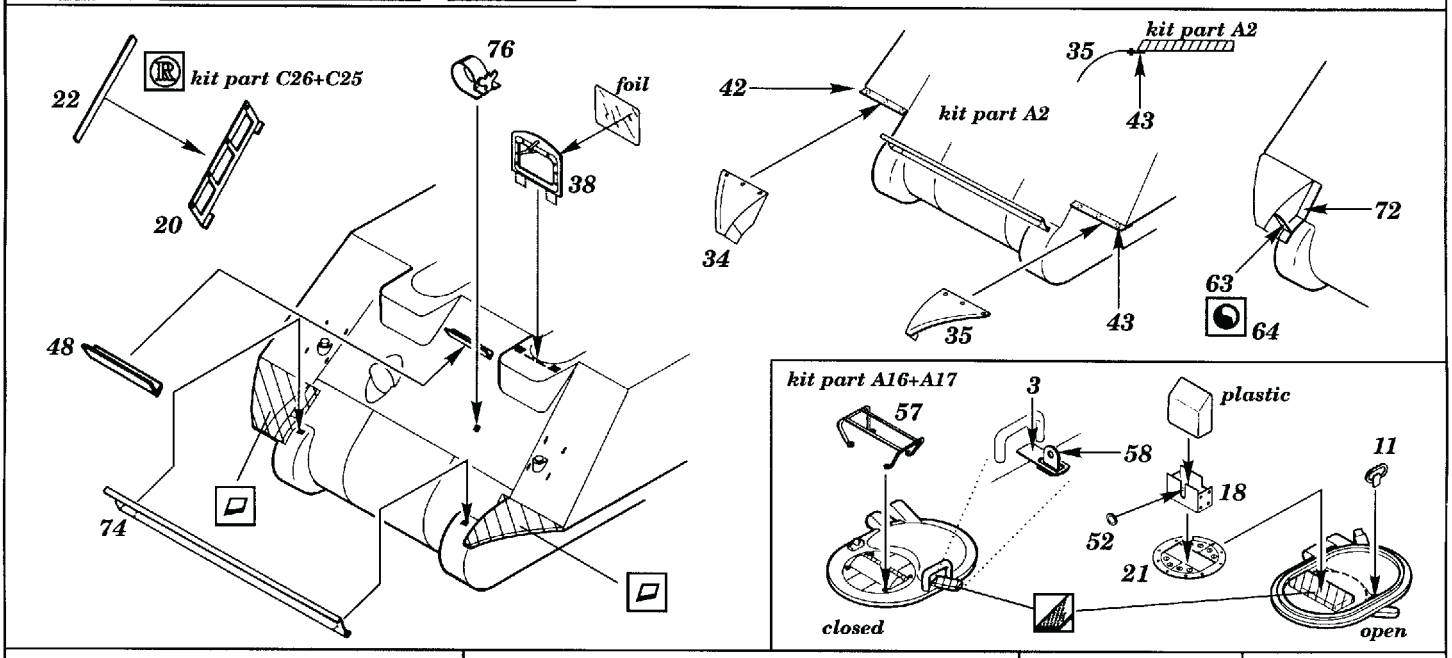

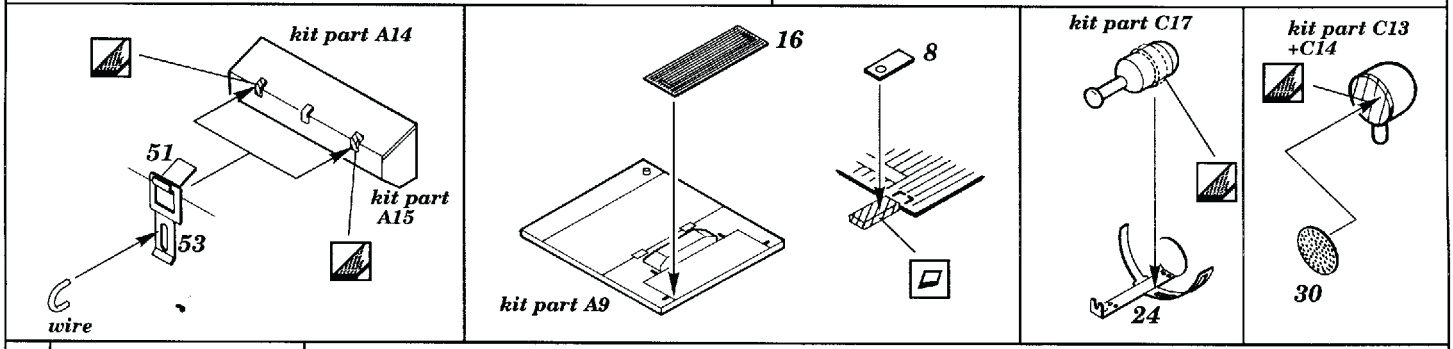

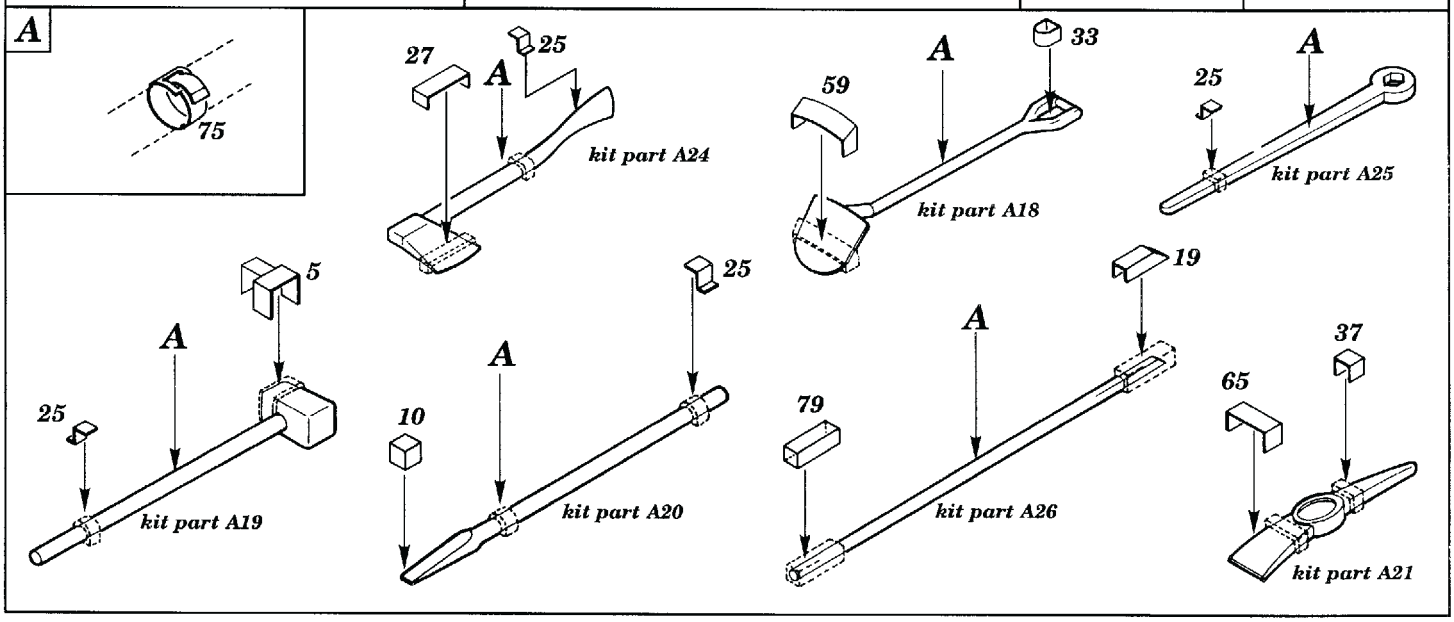

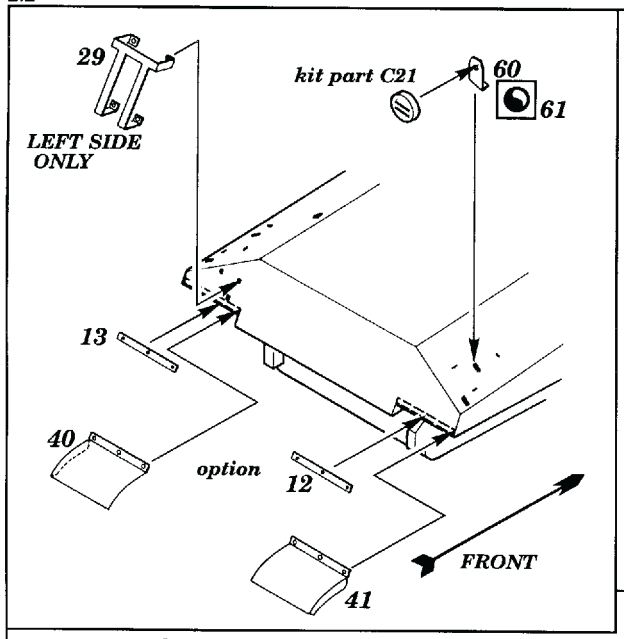
29
LEFT SIDE ONLY
kit part C21
60
61
13
40
option
12
41
FRONT

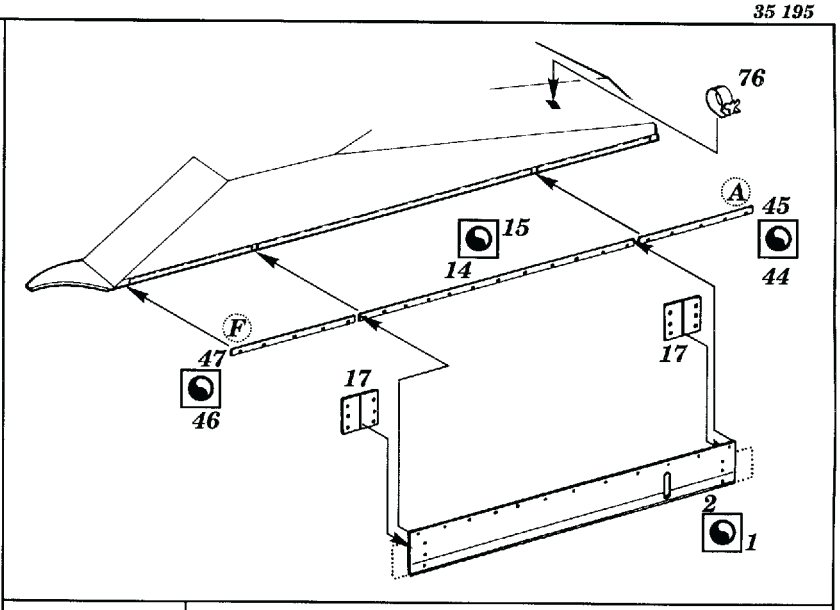
76
A
45
15
14
44
F
47
46
17
17
2
1

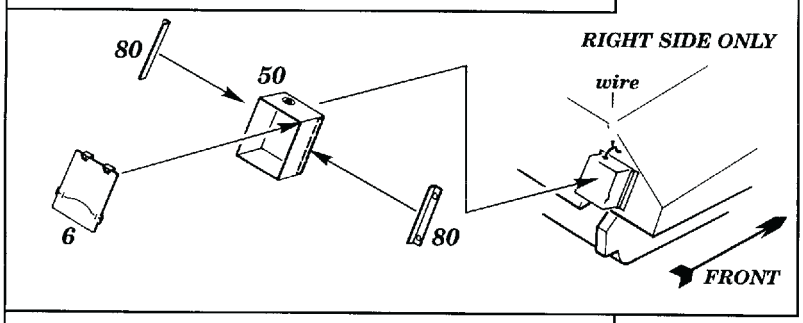
80
50
RIGHT SIDE ONLY
wire
6
80
FRONT

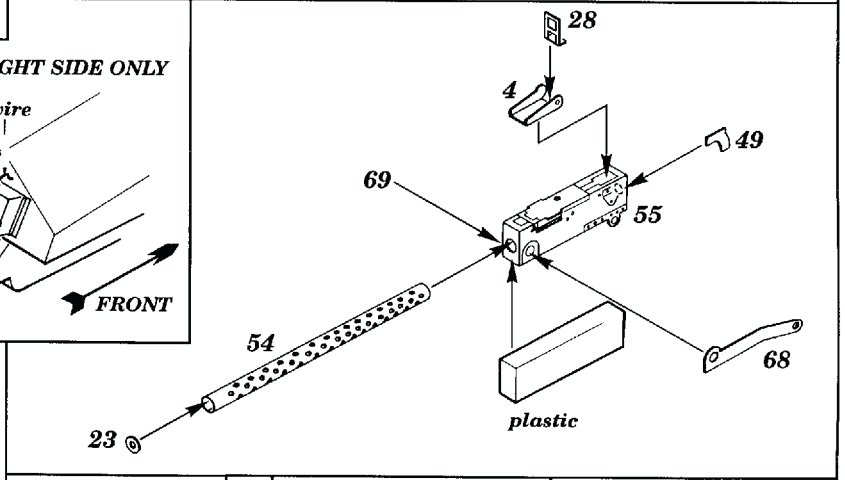
28
4
49
69
55
54
68
plastic
23

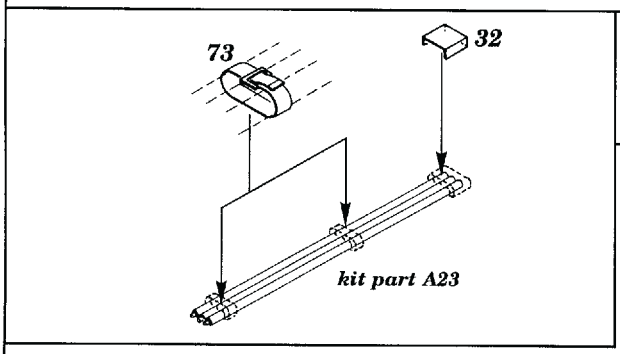
73
32
kit part A23

A
67
31
7
62

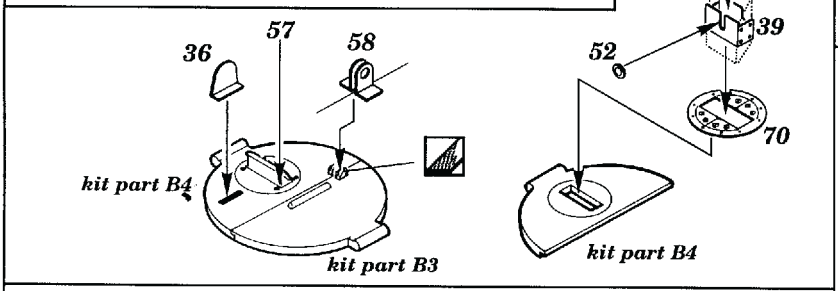
plastic
36
57
58
39
52
70
kit part B4
kit part B3
kit part B4

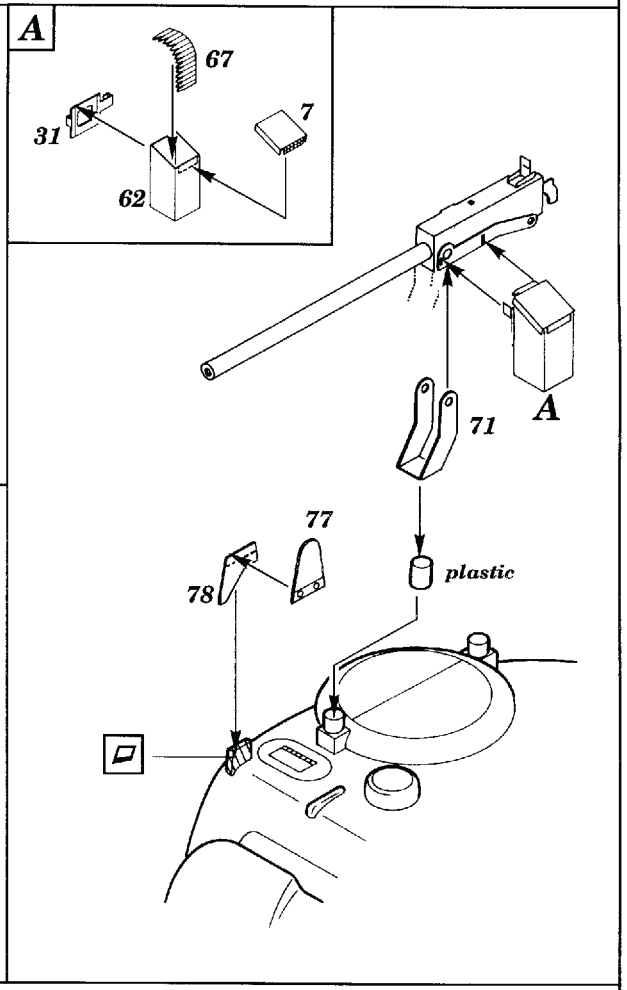
A
71
77
plastic
78

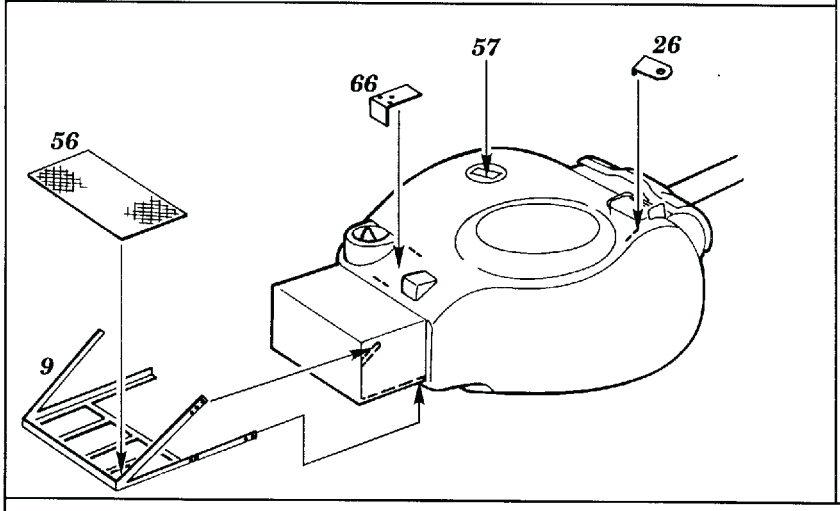
57
26
66
56
9