Flakpanzer Gepard

1/35 scale detail set for Tamiya kit

35 120

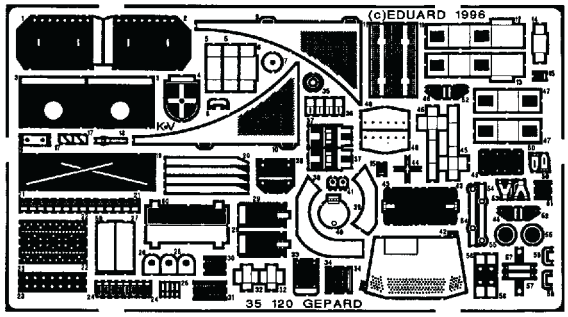

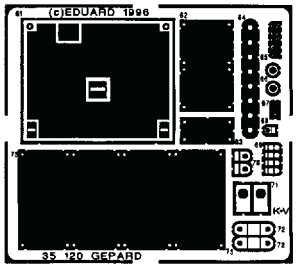

OPPOSITE SIDE
REMOVE
REPLACE

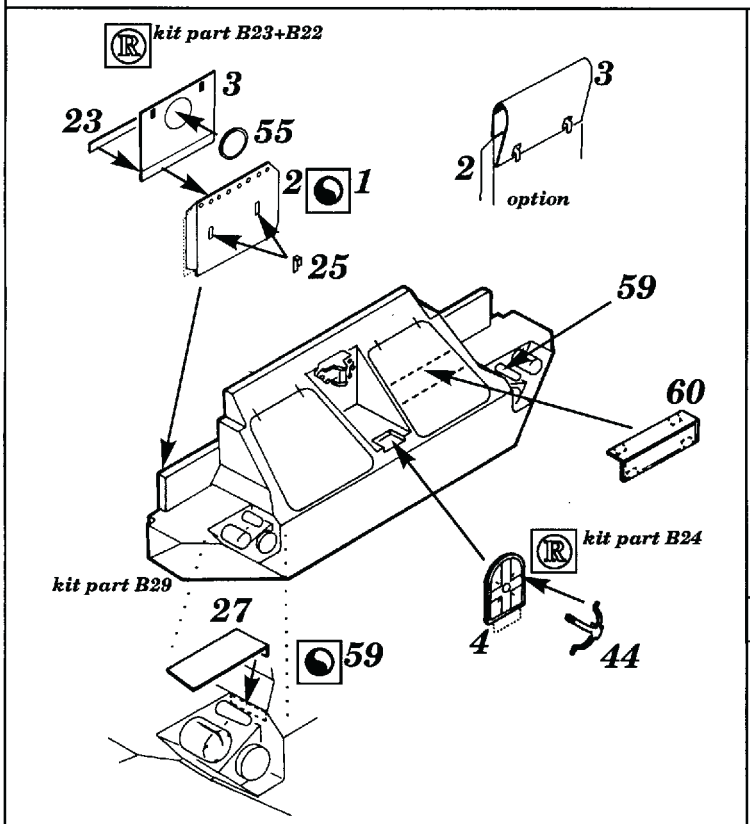

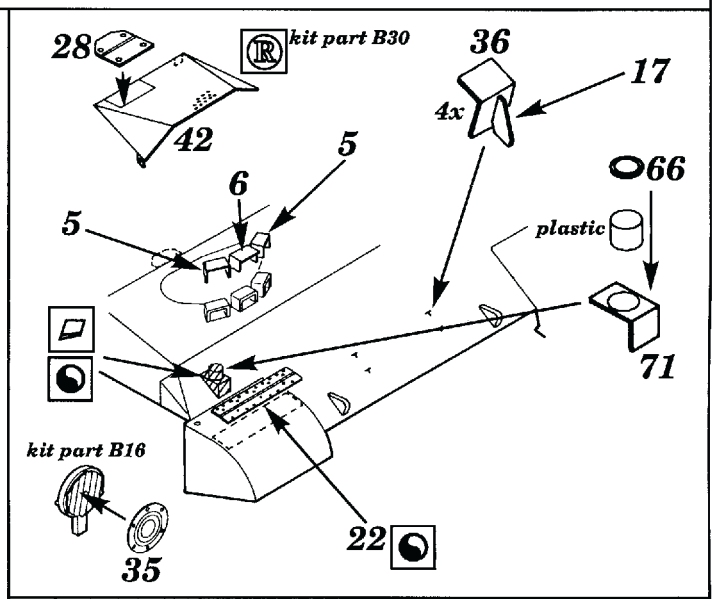

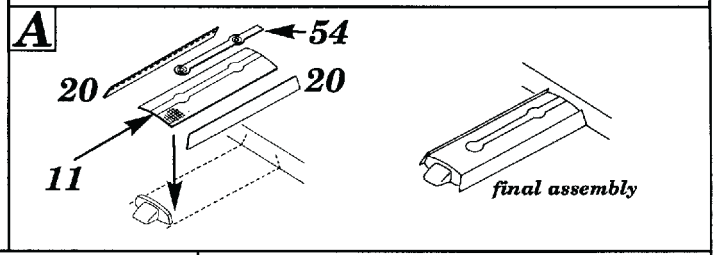

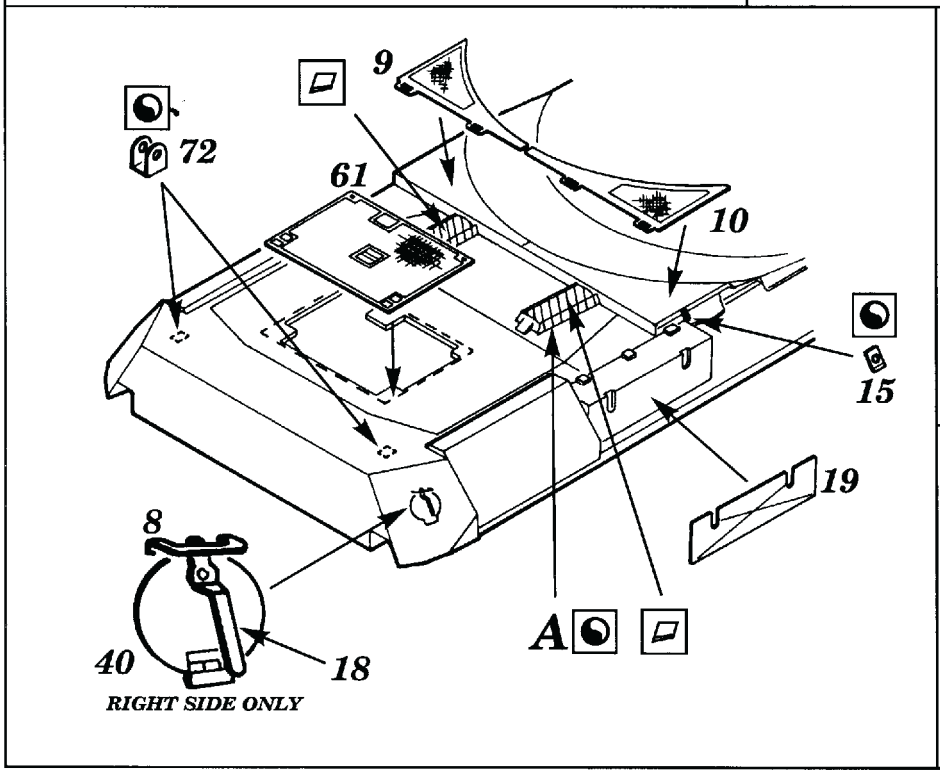

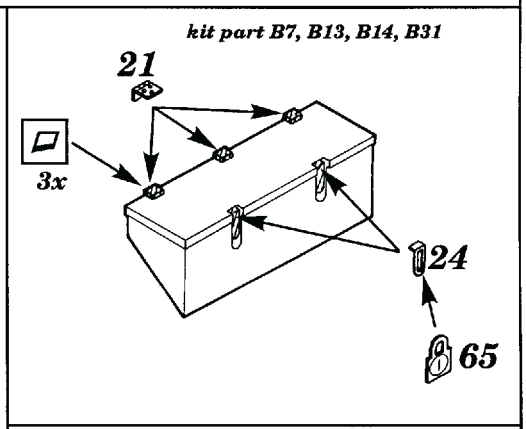

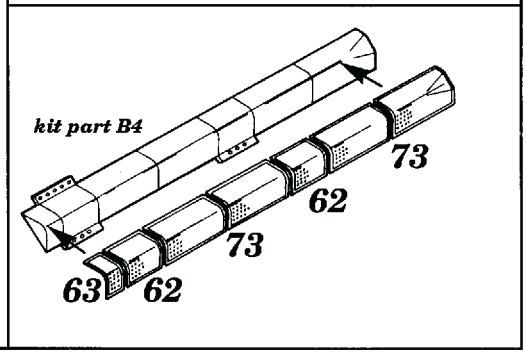

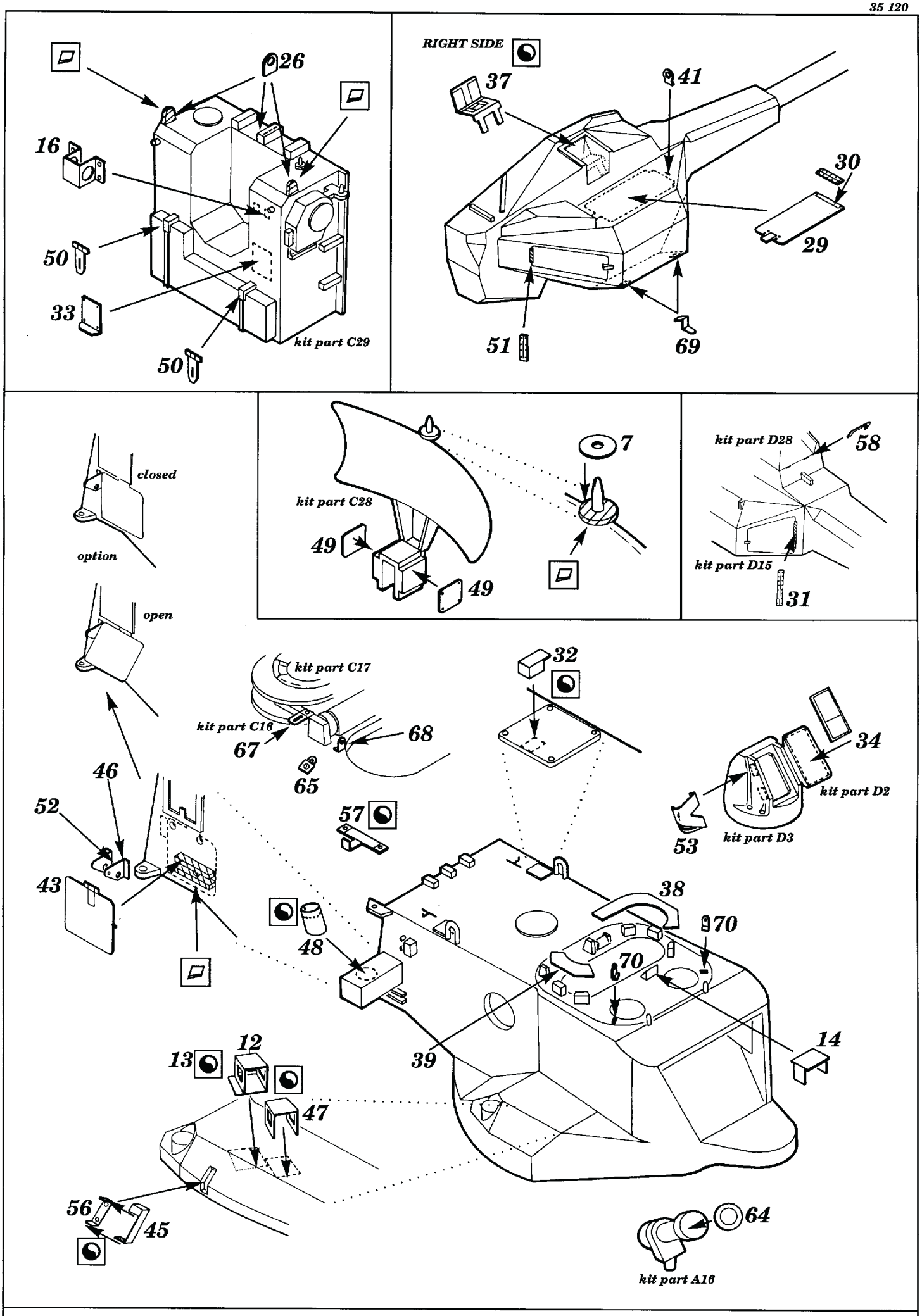

(c) EDUARD 1996