eduard MASK

EX 357

Spiteful F.MK.14 1/48

The die-cut mask for accurate canopy frame painting of the

Hobby Boss / Trumpeter scale 1/48 KIT

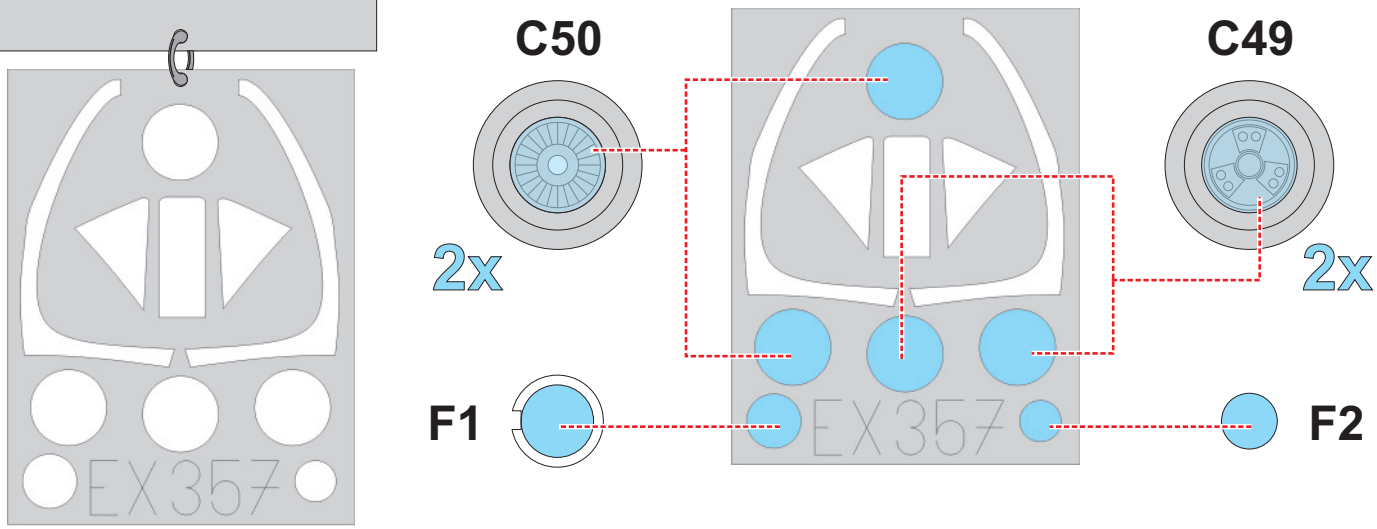

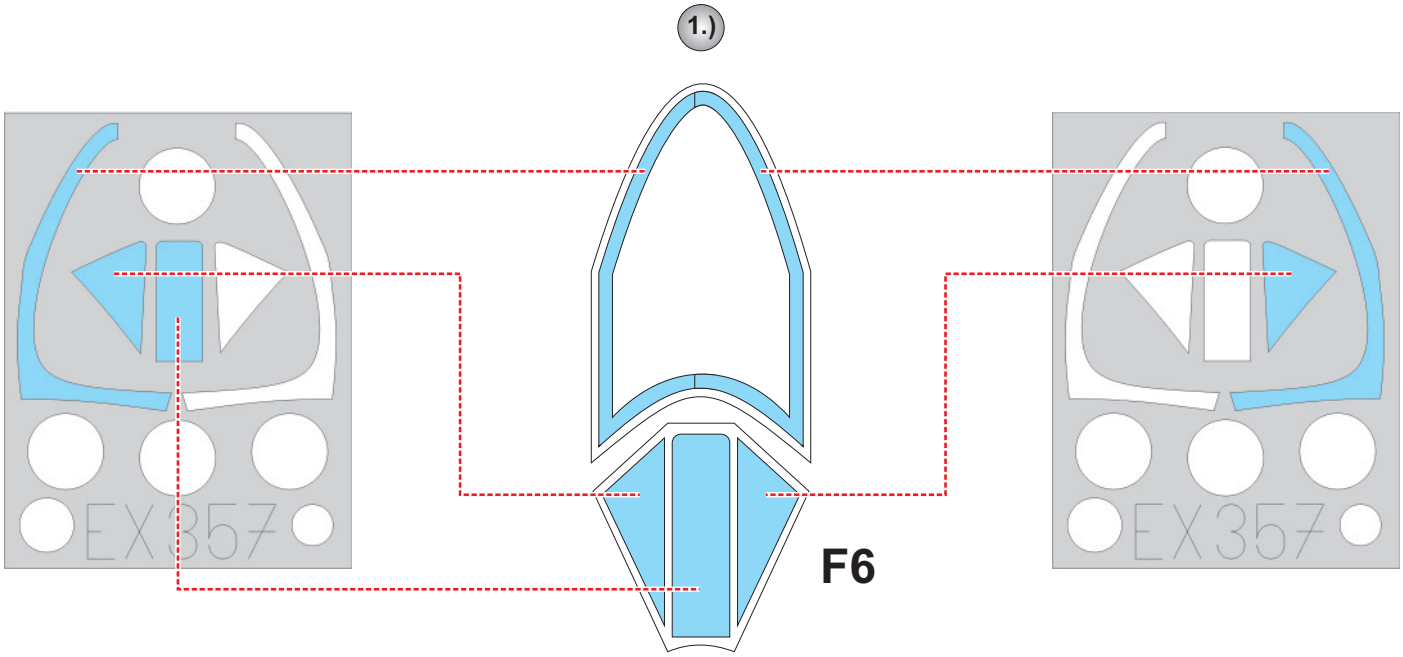

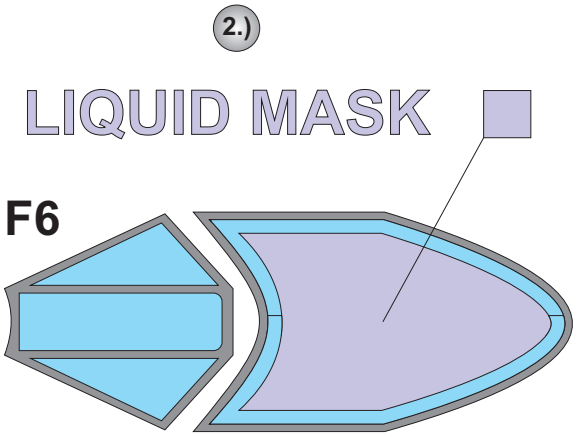

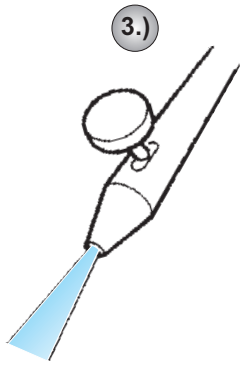

© EDUARD M.A. 2012