Steyr RSO/03 with PaK.40

1/35 scale detail set for REVELL kit • sada detailů pro model 1/35 REVELL

eduard

35 988

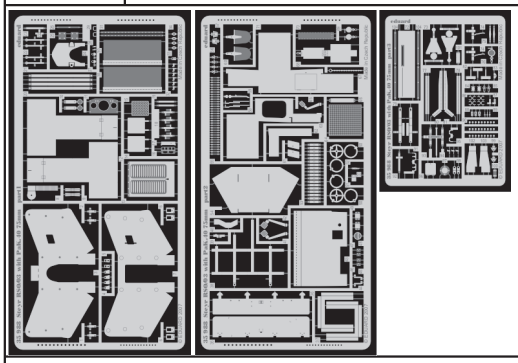

print

- APPLY EXPRESS MASK AND PAINT BEFORE GLUING / POUŽIT EXPRESS MASK NABARVIT PŘED SLEPENÍM
- SYMETRICAL ASSEMBLY / SYMETRICKÁ MONTÁŽ
- REMOVE / ODSTRANIT
- BEND / OHNOUT
- GRIND / OBROUSIT
- OPTION / VOLBA
- DRILL HOLE / VRTAT OTVOR
- REPLACE / NAHRADIT

- ORIGINAL KIT PARTS / PŮVODNÍ DÍLY STAVEBNICE
- PHOTO-ETCHED PARTS / LEPTANÉ DÍLY
- PARTS TO BE REMOVED / DÍLY K ODSTRANĚNÍ
- FILL / TMELIT

REFERENCES:

Nuts&Bolts.....vol.09

Ground Power.....#4/2004

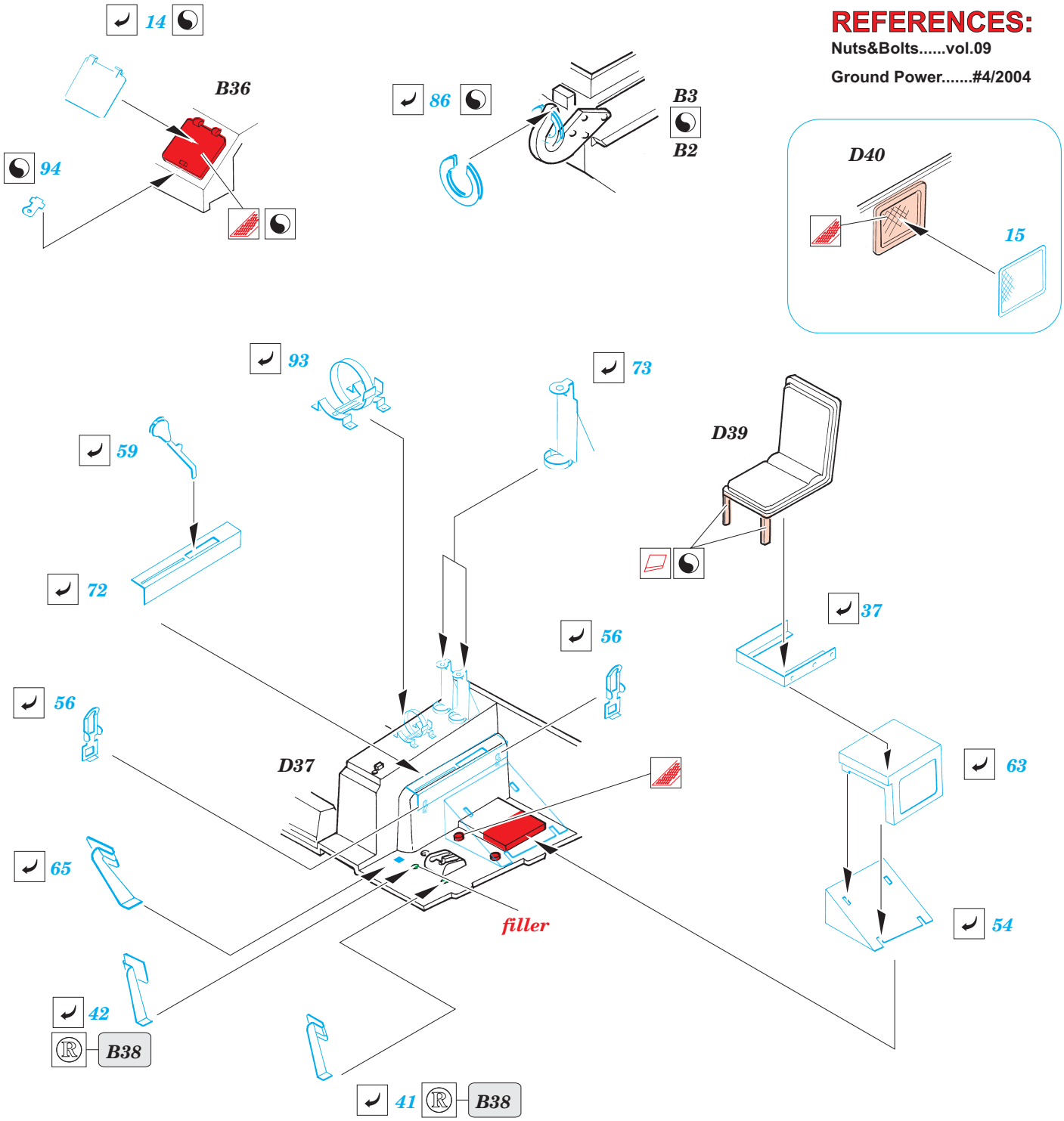

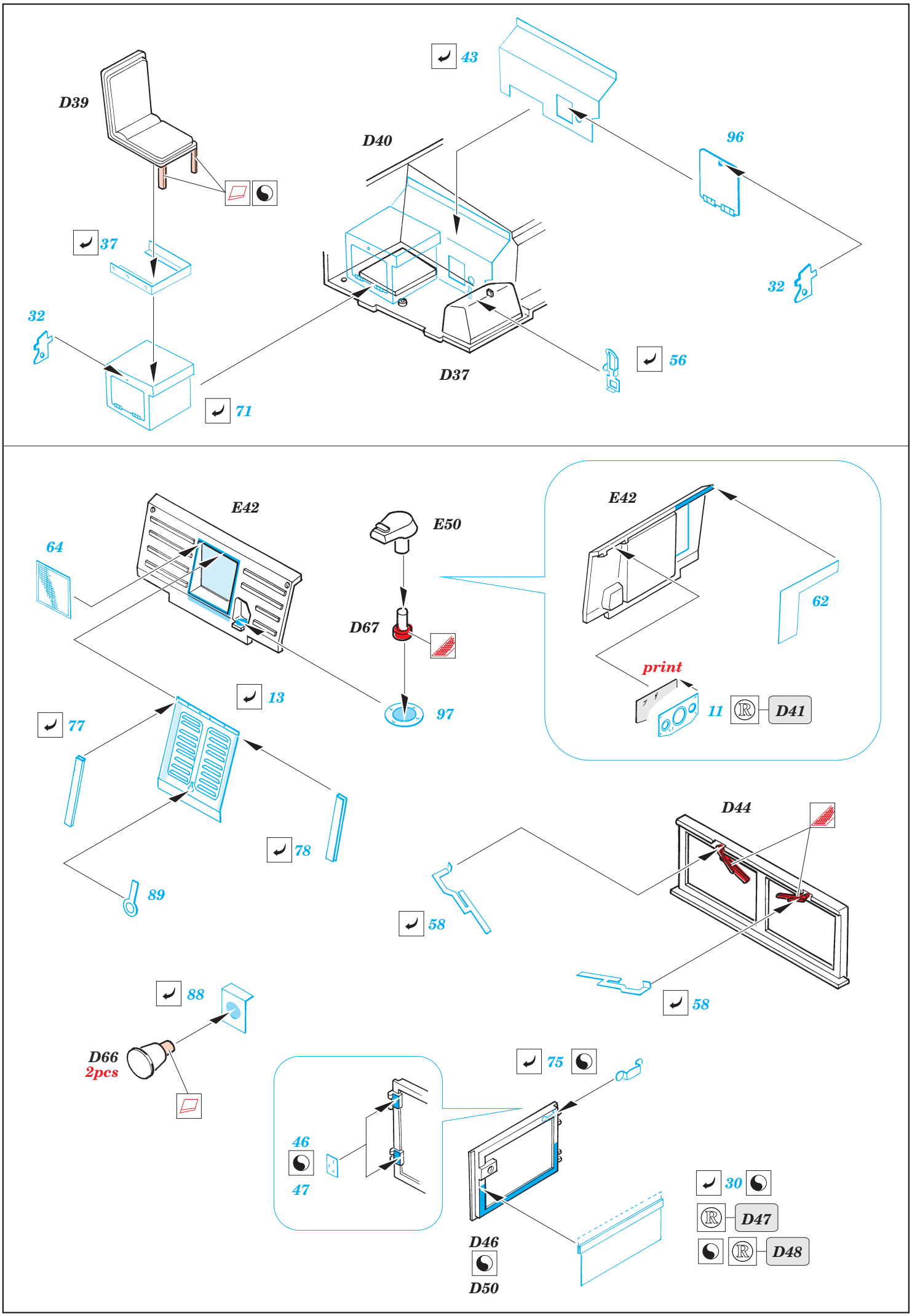
D39
43
D40
96
37
32
32
56
D37
71
E42
64
E50
D67
97
E42
62
print
11
D41
13
77
78
89
D44
58
58
88
D66
2pcs
75
46
47
30
D47
D46
D48
D50

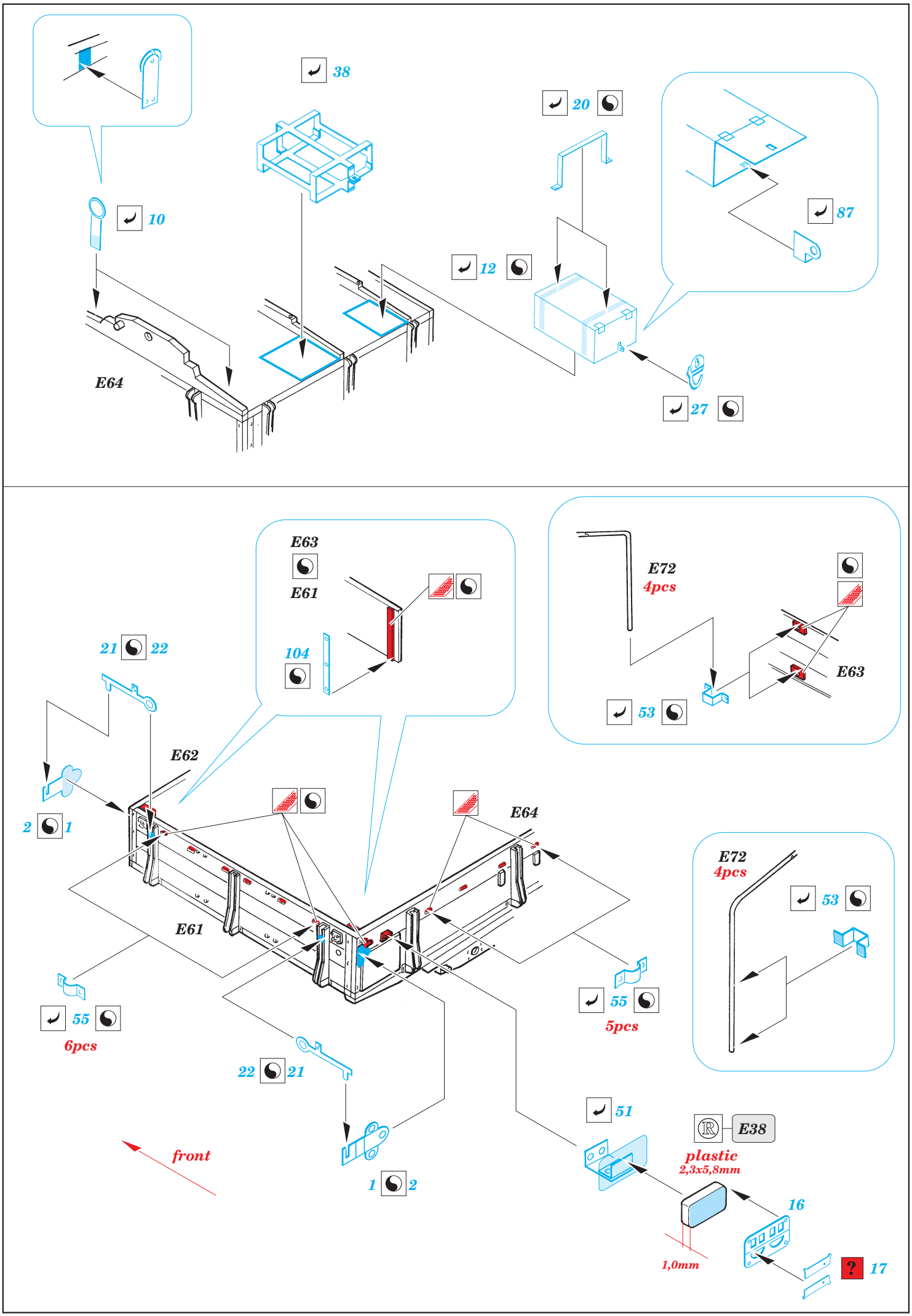
38
20
10
87
12
E64
27
E63
E61
104
E72
4pcs
E63
53
21
22
E62
2
1
E64
E72
4pcs
53
E61
55
6pcs
55
5pcs
22
21
51
E38
plastic
2,3x5,8mm
front
1
2
16
1,0mm
17

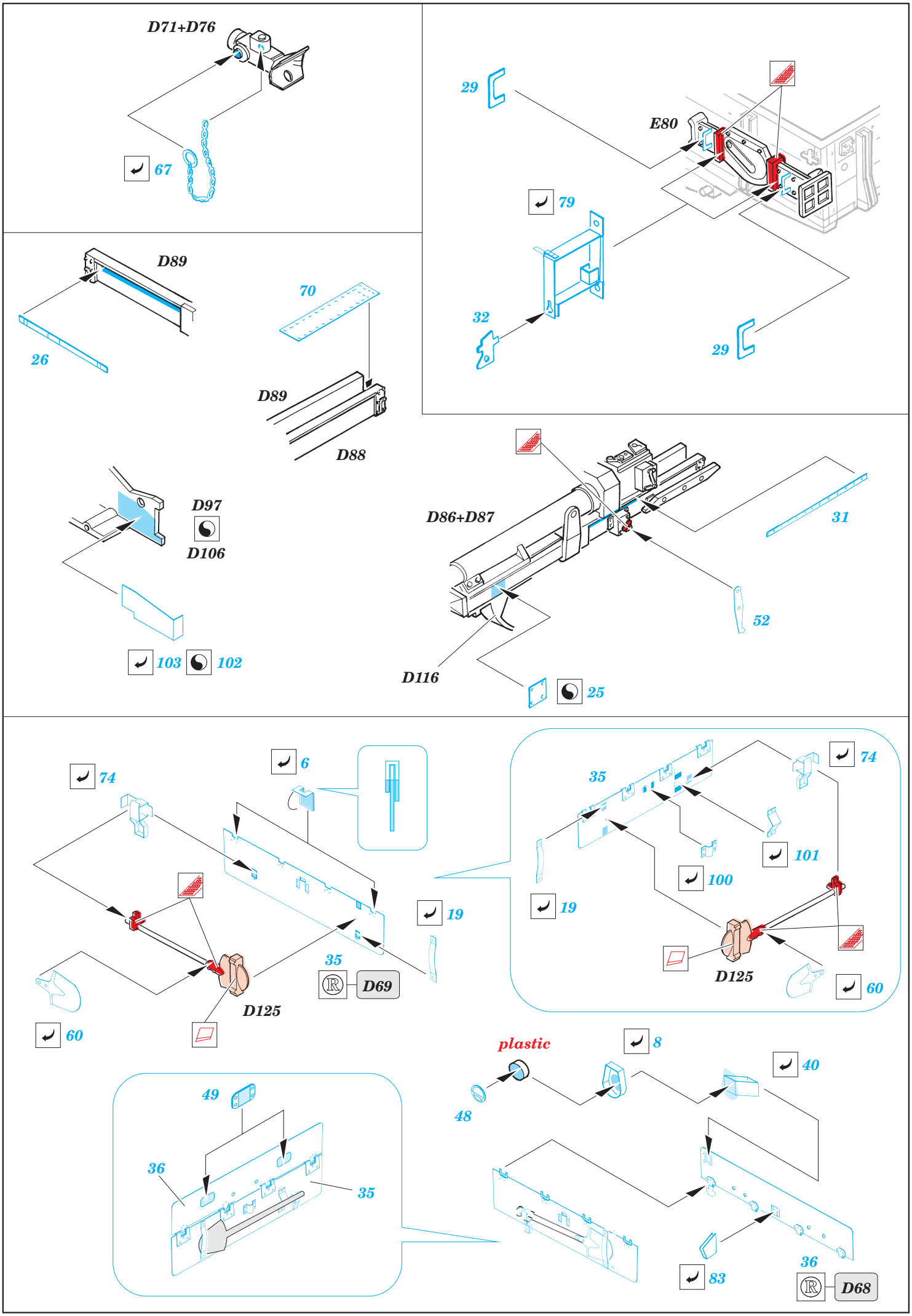
D71+D76
67
29
E80
79
32
29
D89
26
70
D89
D88
D97
D106
103
102
D86+D87
31
52
D116
25
74
6
35
19
D69
D125
60
74
35
101
100
19
D125
60
plastic
8
40
48
49
36
35
83
36
D68

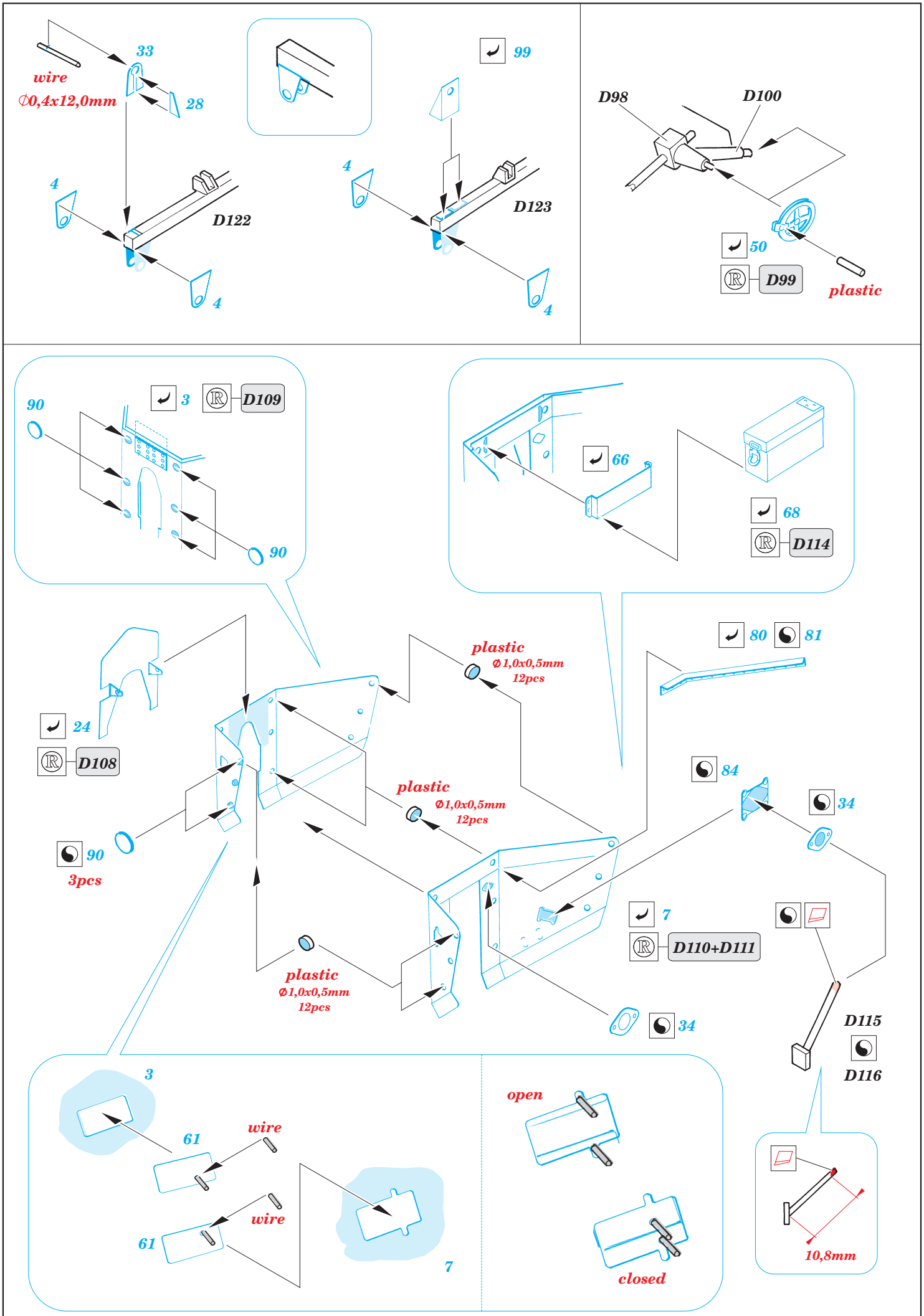
33
wire
⌀0,4x12,0mm
28
4
D122
4
99
4
D123
4
D98
D100
50
D99
plastic
3
D109
90
90
66
68
D114
80
81
plastic
⌀1,0x0,5mm
12pcs
24
D108
plastic
⌀1,0x0,5mm
12pcs
84
34
90
3pcs
7
D110+D111
plastic
⌀1,0x0,5mm
12pcs
34
D115
D116
3
61
wire
wire
61
7
open
closed
10,8mm

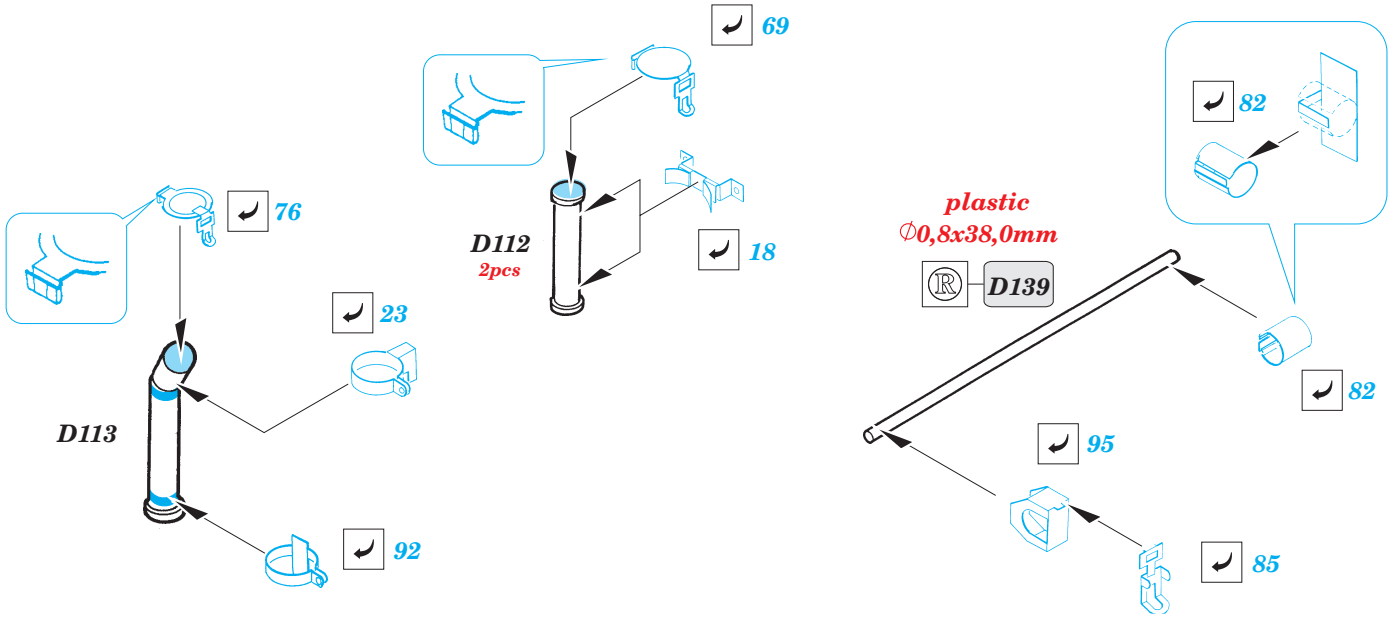
69
76
D112
2pcs
18
23
D113
92
82
plastic
Ø0,8x38,0mm
D139
82
95
85

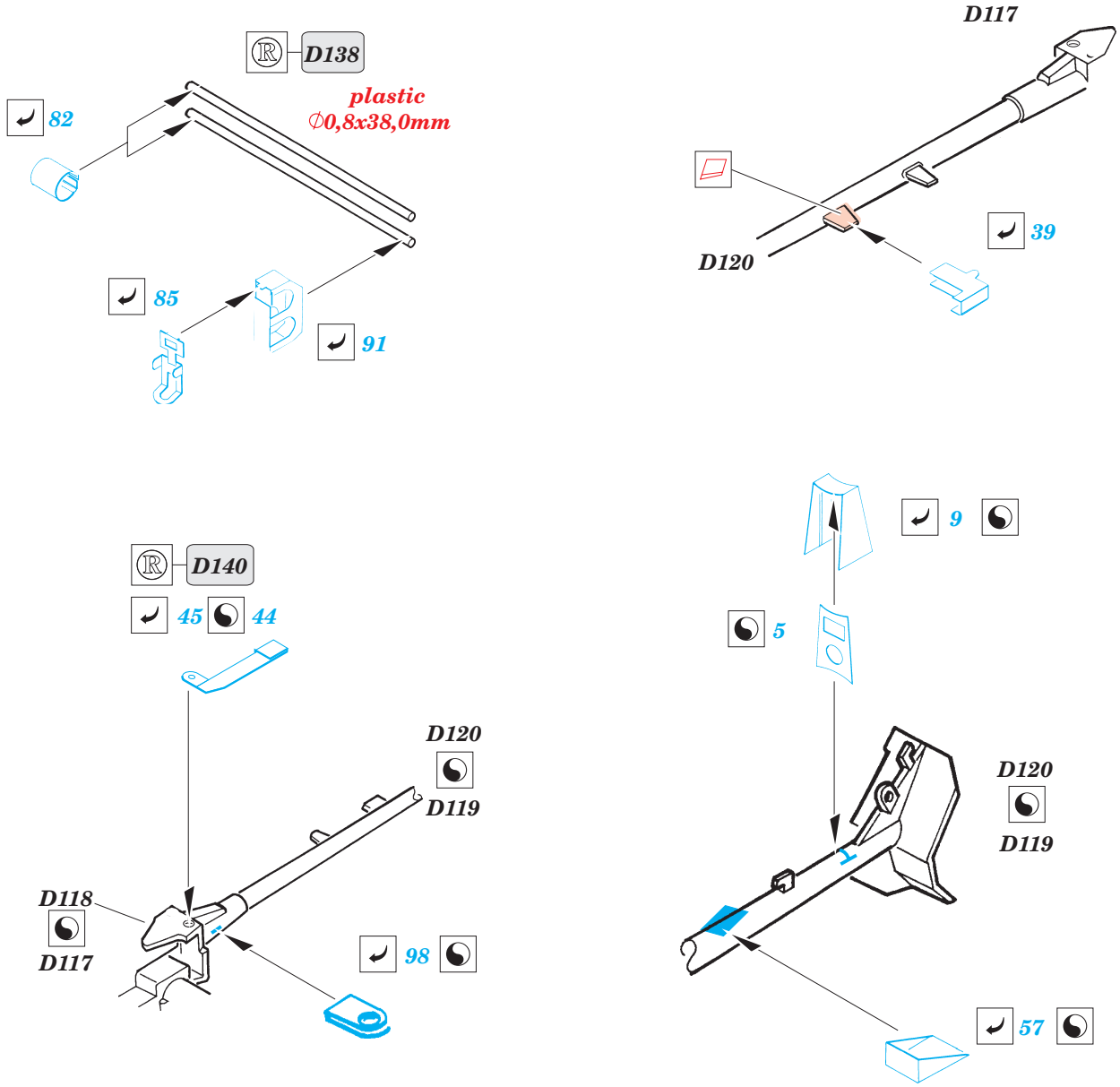
D138
plastic
Ø0,8x38,0mm
82
85
91
D117
39
D120
D140
45
44
D120
D119
D118
D117
98
9
5
D120
D119
57