Centurion Mk.5/1 Australian

1/35 scale detail set for AFV Club kit 35100 • sada detailů pro model 1/35 AFV Club 35100

eduard

35 925

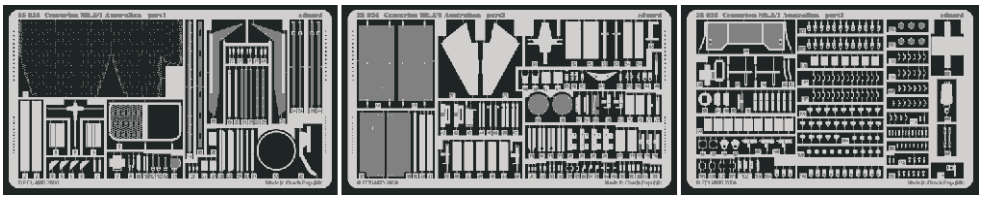

FILM

- APPLY EXPRESS MASK AND PAINT BEFORE GLUING / POUŽIT EXPRESS MASK NABARVIT PŘED SLEPENÍM
- SYMETRICAL ASSEMBLY / SYMETRICKÁ MONTÁŽ
- REMOVE / ODSTRANIT
- GRIND / OBROUSIT
- DRILL HOLE / VRTAT OTVOR
- BEND / OHNOUT
- OPTION / VOLBA
- REPLACE / NAHRADIT

- ORIGINAL KIT PARTS / PŮVODNÍ DÍLY STAVEBNICE
- PHOTO-ETCHED PARTS / LEPTANÉ DÍLY
- PARTS TO BE REMOVED / DÍLY K ODSTRANĚNÍ
- FILL / TMELIT

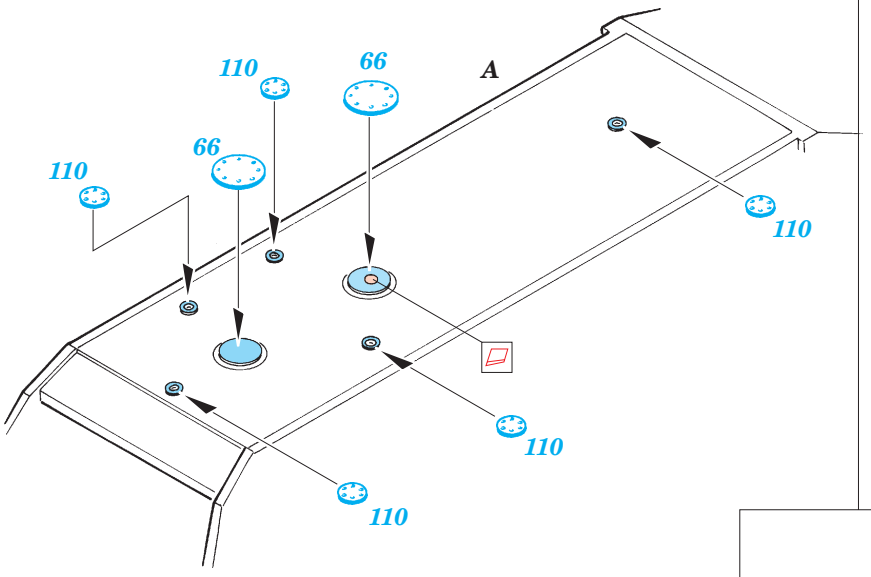

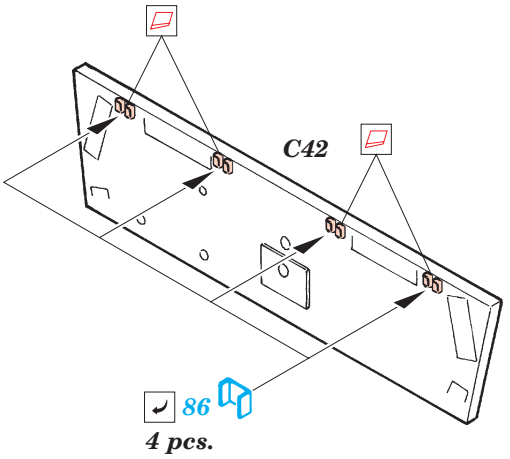

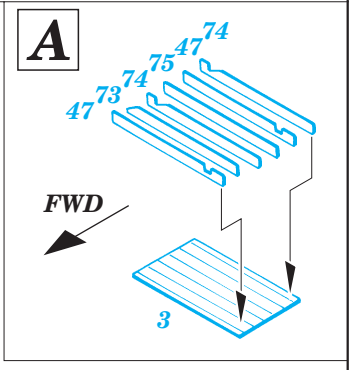

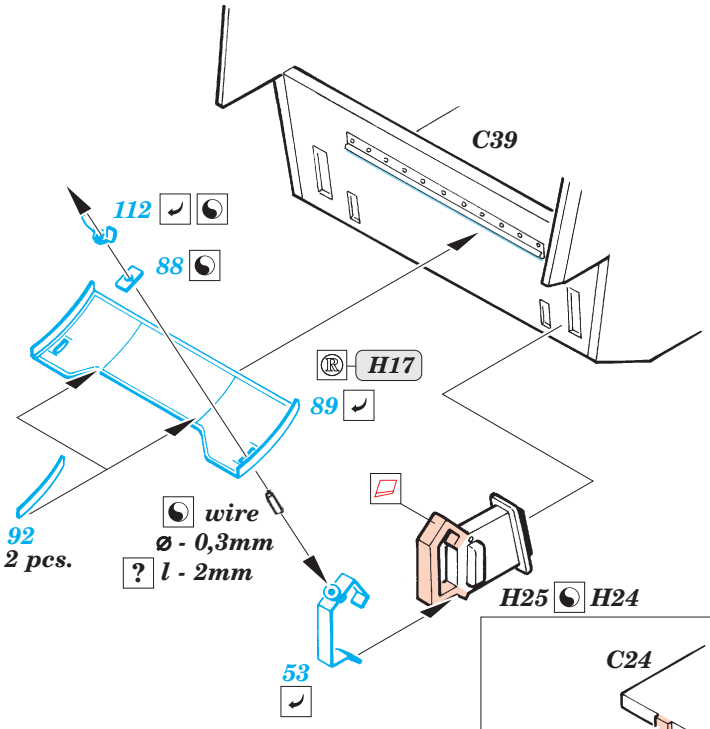

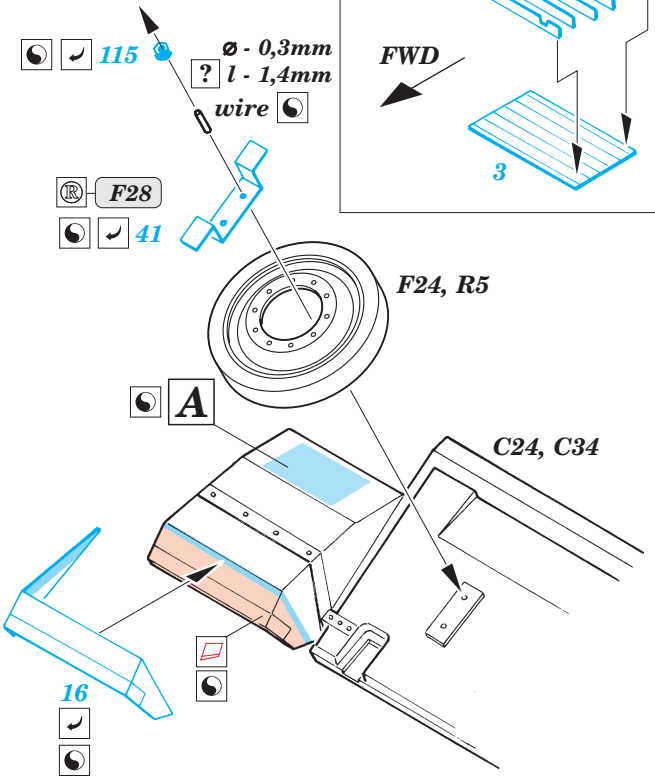

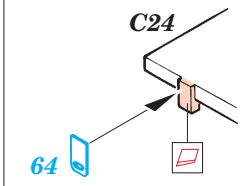

REFERENCES:

GROUND POWER # 7/ JULY 2006
GROUND POWER # 8/ AUG. 2006

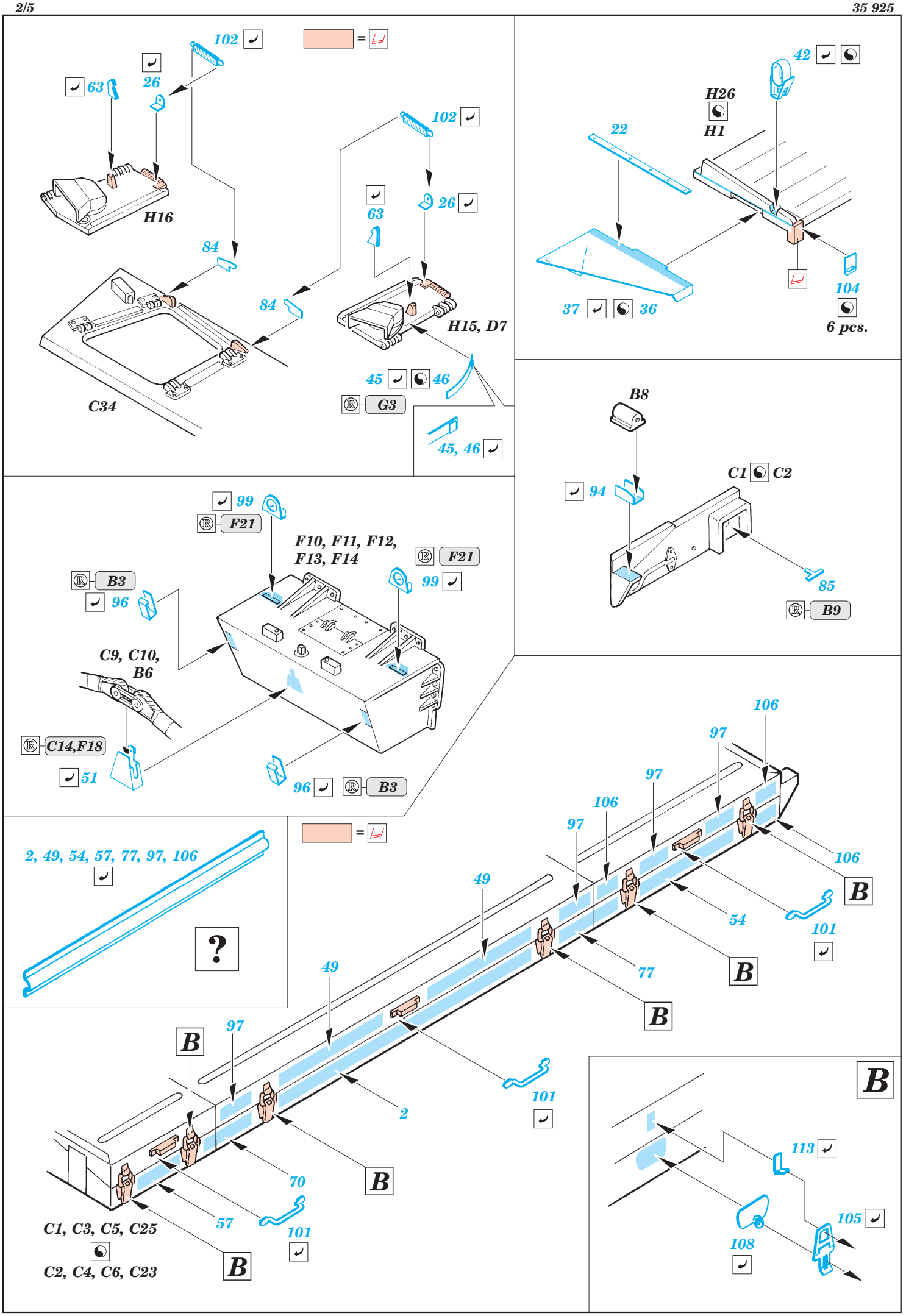
102
26
63
H16
84
C34
102
63
26
84
H15, D7
45 46
G3
45, 46
42
H26
H1
22
37 36
104
6 pcs.
B8
94
C1 C2
85
B9
99
F21
F10, F11, F12,
F13, F14
F21
99
B3
96
C9, C10,
B6
C14,F18
51
96
B3
2, 49, 54, 57, 77, 97, 106
?
106
97
97
106
97
106
49
54
101
77
B
B
B
49
97
B
2
101
70
B
57
101
C1, C3, C5, C25
C2, C4, C6, C23
B
B
113
105
108

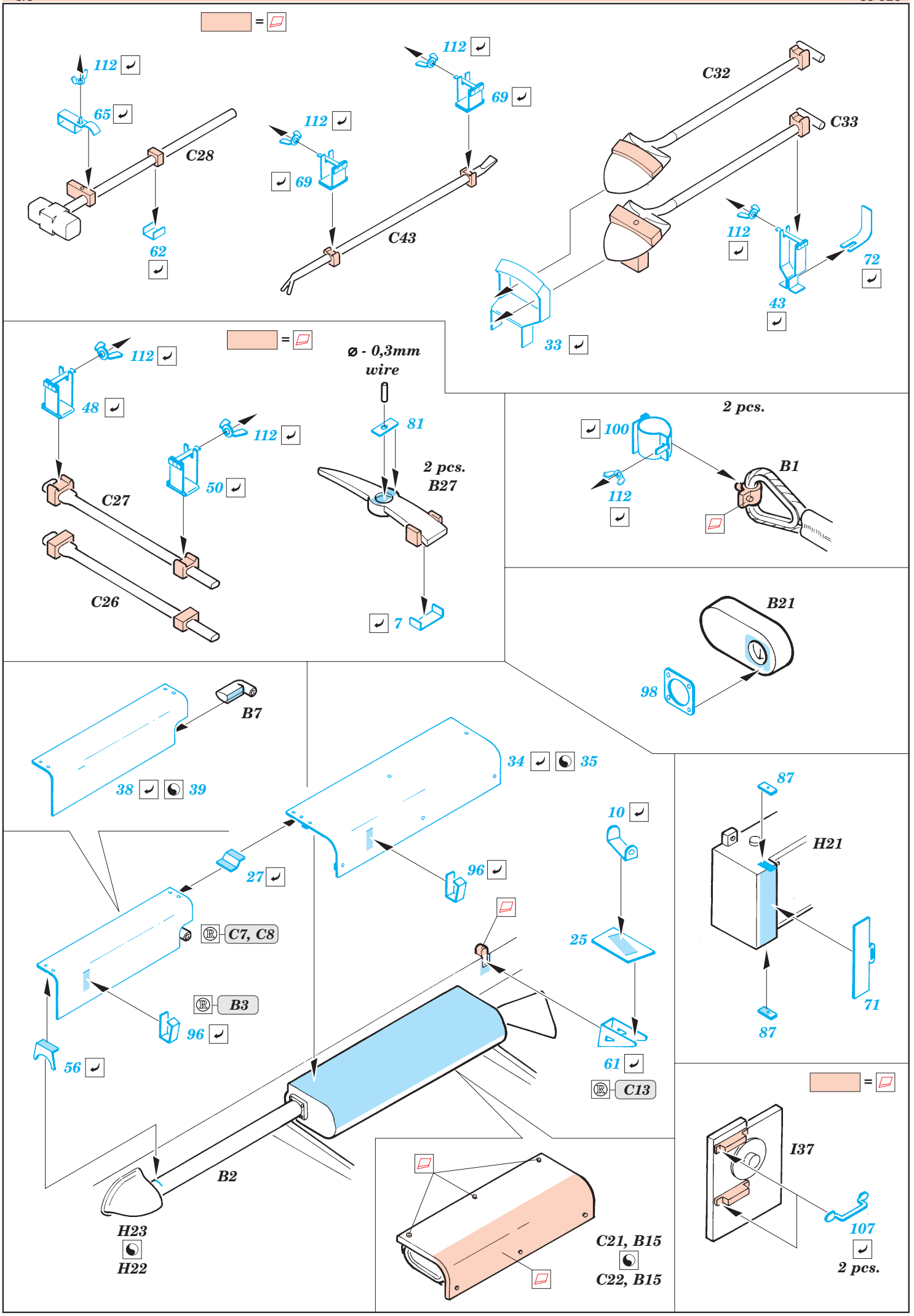
=
112
65
C28
62
112
69
112
69
C43
C32
C33
112
72
43
33
=
112
48
112
50
C27
C26
ø - 0,3mm wire
81
2 pcs.
B27
7
2 pcs.
100
112
B1
B21
98
B7
38
39
34
35
10
27
96
25
87
H21
71
87
C7, C8
B3
96
56
61
C13
B2
H23
H22
C21, B15
C22, B15
=
I37
107
2 pcs.

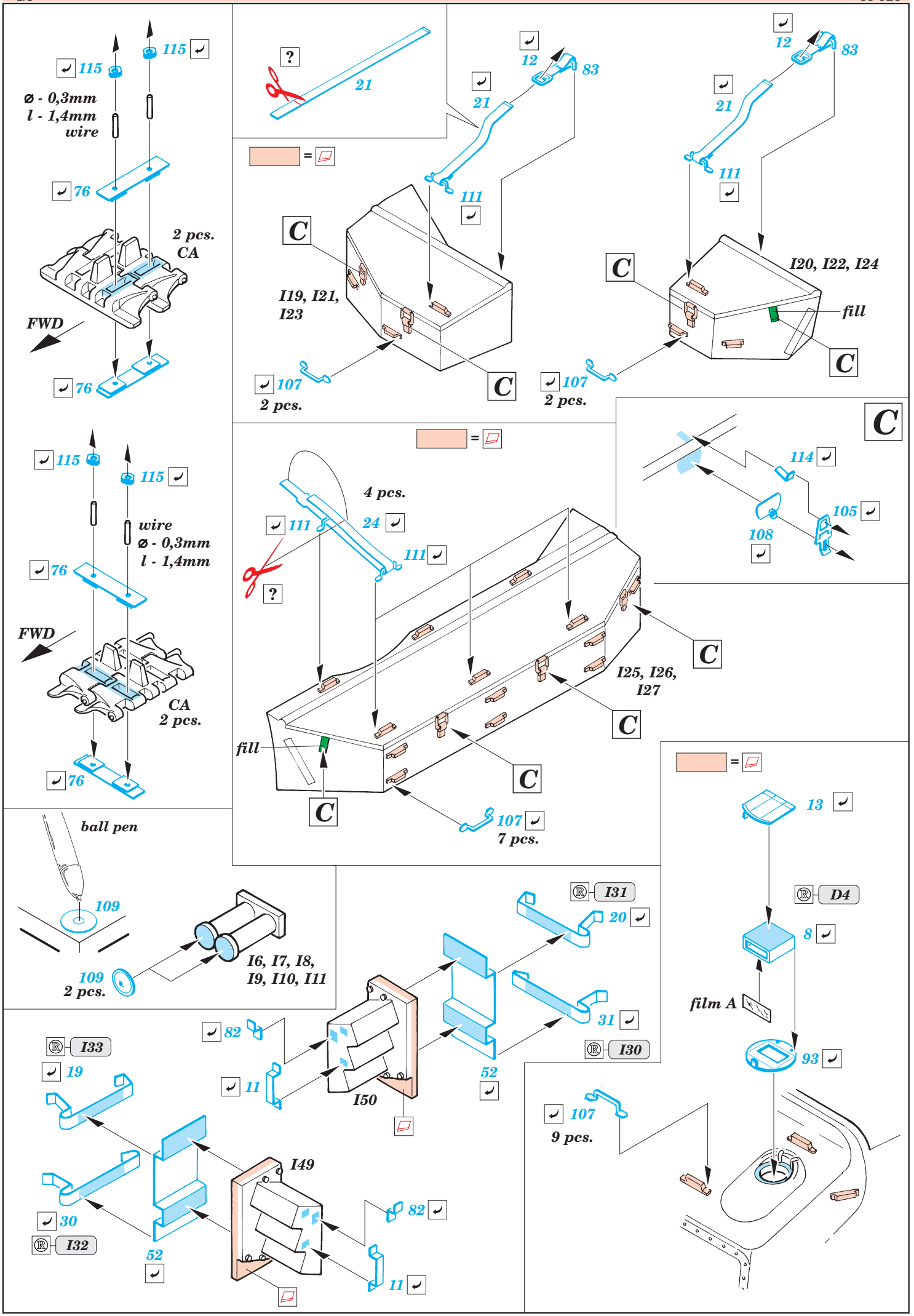
115
115
ø - 0,3mm
l - 1,4mm
wire
76
2 pcs.
CA
FWD
76
?
21
=
21
12
83
111
C
I19, I21,
I23
107
2 pcs.
C
12
83
21
111
C
I20, I22, I24
fill
107
2 pcs.
C
C
114
105
108
115
115
wire
ø - 0,3mm
l - 1,4mm
76
FWD
CA
2 pcs.
76
=
4 pcs.
111
24
111
?
C
I25, I26,
I27
C
fill
C
C
107
7 pcs.
=
13
D4
8
film A
93
ball pen
109
109
2 pcs.
I6, I7, I8,
I9, I10, I11
I31
20
31
I30
82
11
I50
52
107
9 pcs.
I33
19
I49
30
I32
52
82
11

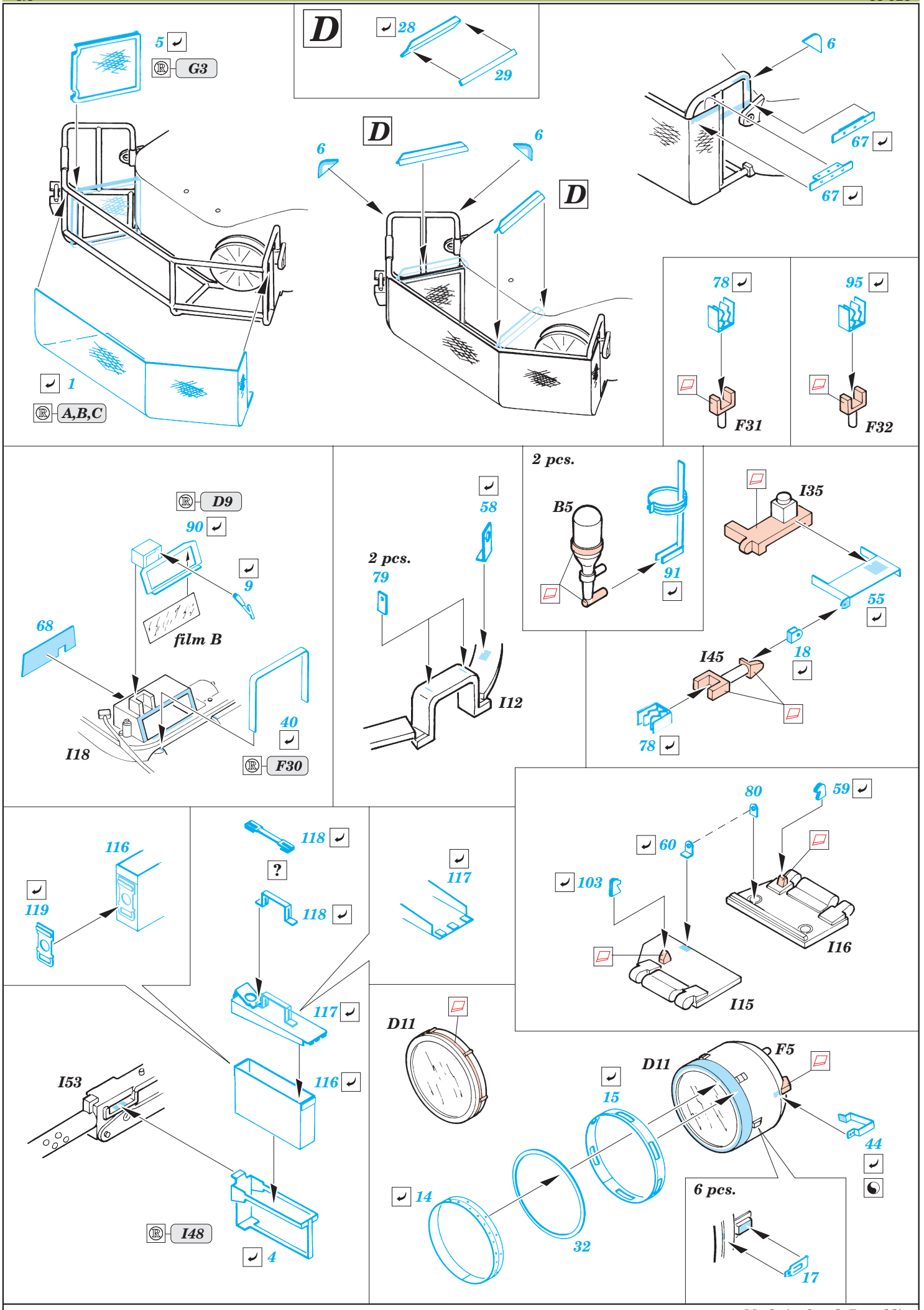
D
28
29
5
G3
6
67
67
D
6
6
D
78
F31
95
F32
1
A,B,C
D9
90
9
68
film B
I18
40
F30
2 pcs.
58
2 pcs.
79
I12
2 pcs.
B5
91
I35
55
18
I45
78
80
59
60
103
I16
I15
116
119
118
?
118
117
117
116
I53
I48
4
D11
D11
F5
15
44
14
32
6 pcs.
17