MARDER II D

35 266

1/35 scale detail set for Alan kit

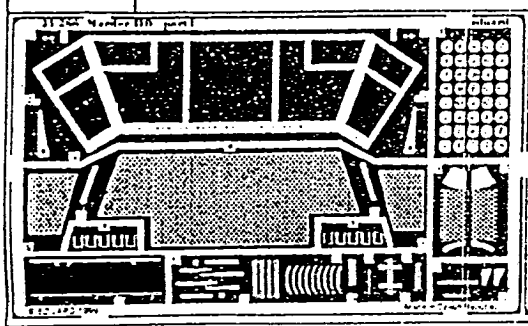

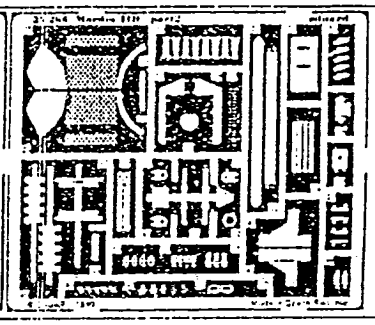

OPPOSITE SIDE

REMOVE

REPLACE

GRIND

BEND

34

kit part A48

kit part A33

51

42

52

kit part D16

35

3x

44

30

53

kit part A35

31

kit part A21 (A52)

27

28

kit part C17

20

19

50

37

1

40

41

32

kit part D5

13

17

kit part C72

36

26

48

kit part D19

kit part A37

kit part A30

10

2

3

kit part A24

15

14

23

24

kit part A43 (A44)

33

kit part D11

kit part A37

kit part A30

10

5

4

9

6

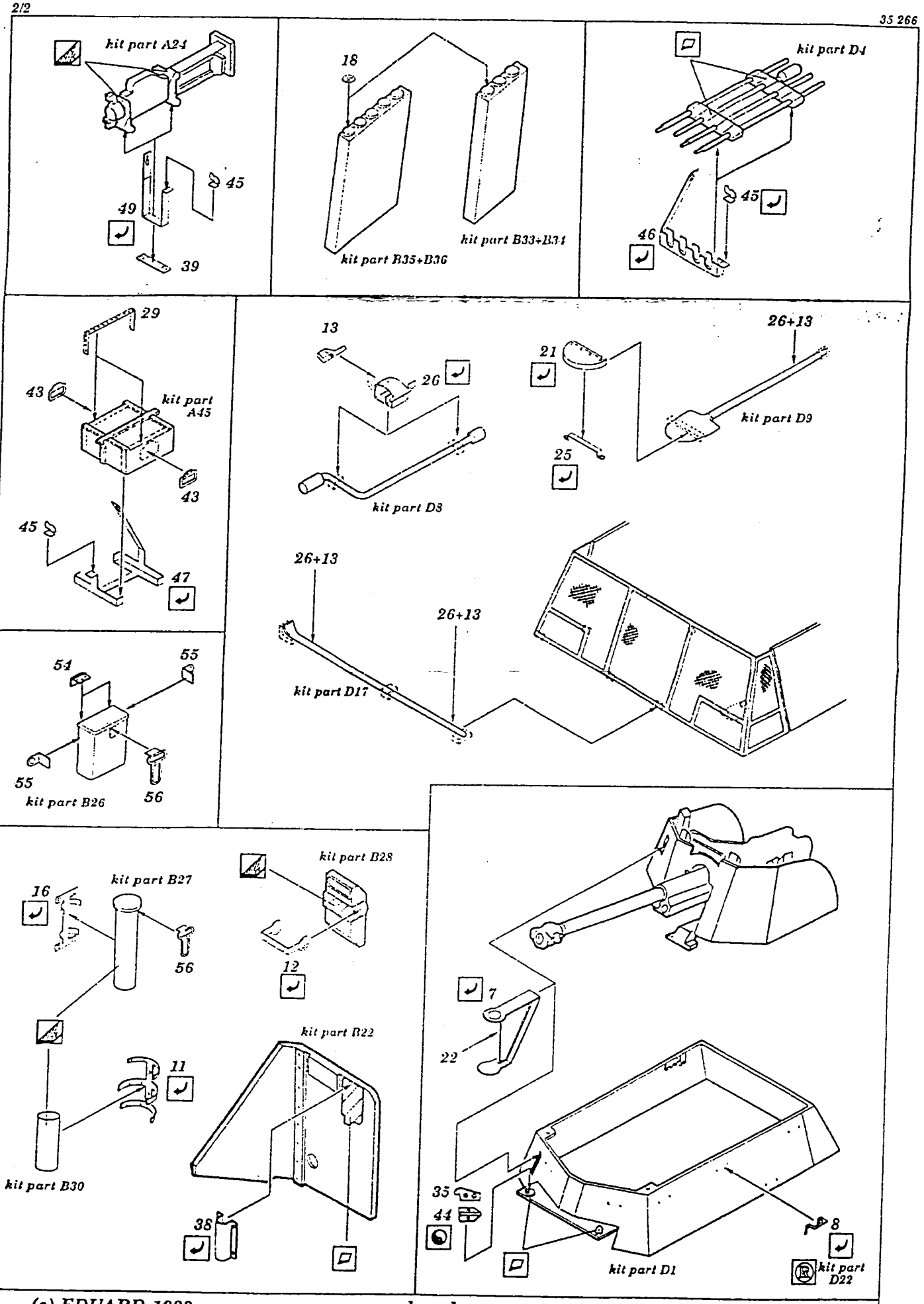
kit part A24
45
49
39
18
kit part B35+B36
kit part B33+B34
kit part D4
45
46
29
43
kit part A45
43
45
47
13
26
kit part D8
21
25
26+13
kit part D9
26+13
26+13
kit part D17
54
55
55
56
kit part B26
kit part B28
kit part B27
16
56
12
7
22
kit part B22
11
kit part B30
35
44
38
8
kit part D1
kit part D22